BA00294K/09/EN/07.25-00
71744307
2025-09-30

Valid as of version
V01.05.xx (device software)

Operating Instructions
EngyCal RS33

Steam calculator for one measuring point with one pulse/ analog input for flow and two RTD/analog inputs for temperature/pressure

Endress+Hauser
People for Process Automation

Table of contents

1 About this document . . . 3
1.1 Document function . . . 3
1.2 Symbols . . . 3
1.3 Documentation . . . 4
1.4 Change history . . . 5

2 Basic safety instructions . . . 5
2.1 Requirements for the personnel . . . 6
2.2 Intended use . . . 6
2.3 Workplace safety . . . 6
2.4 Operational safety . . . 6
2.5 Product safety . . . 6
2.6 IT security . . . 7

3 Product description . . . 7
3.1 Product design . . . 7

4 Incoming acceptance and product identification . . . 7
4.1 Incoming acceptance . . . 7

5 Installation . . . 8
5.1 Installation conditions . . . 8
5.2 Dimensions . . . 9
5.3 Installing the device . . . 10
5.4 Installation instructions for temperature sensors . . . 13
5.5 Pressure measuring cell installation instructions . . . 14
5.6 Post-installation check . . . 14

6 Electrical connection . . . 15
6.1 Connecting requirements . . . 15
6.2 Connecting the device . . . 15
6.3 Connecting the sensors . . . 17
6.4 Outputs . . . 20
6.5 Communication . . . 21
6.6 Post-connection check . . . 22

7 Operation options . . . 22
7.1 Overview of operation options . . . 22
7.2 Structure and function of the operating menu . . . 23
7.3 Display and operating elements . . . 24
7.4 Access to the operating menu via "FieldCare Device Setup" . . . 25

8 Commissioning . . . 26
8.1 Post-installation check . . . 26
8.2 Switching on the device . . . 26
8.3 Quick commissioning . . . 26
8.4 Applications . . . 27
8.5 Configuring the basic parameters/general device functions . . . 32
8.6 Optional device settings/special functions . . . 44
8.7 Data analysis and visualization with the Field Data Manager software (accessories) . . . 48

9 Diagnostics and troubleshooting . . . 49
9.1 Instrument diagnostics and troubleshooting . . . 49
9.2 Error messages . . . 50
9.3 Diagnostic list . . . 52
9.4 Output function test . . . 52

10 Maintenance . . . 54
10.1 Adjustment . . . 54
10.2 Cleaning . . . 54

11 Repair . . . 54
11.1 General information . . . 54
11.2 Spare parts . . . 55
11.3 Return . . . 55
11.4 Disposal . . . 55

12 Accessories . . . 55
12.1 Device-specific accessories . . . 56
12.2 Service-specific accessories . . . 56
12.3 Communication-specific accessories . . . 57
12.4 Online tools . . . 57
12.5 System components . . . 57

13 Technical data . . . 58
13.1 Function and system design . . . 58
13.2 Input . . . 62
13.3 Output . . . 65
13.4 Electrical connection . . . 66
13.5 Performance characteristics . . . 66
13.6 Installation . . . 67
13.7 Environment . . . 67
13.8 Mechanical construction . . . 68
13.9 User interface . . . 69
13.10 Certificates and approvals . . . 70

14 Appendix . . . 70
14.1 Operating functions and parameters . . . 70
14.2 Symbols . . . 86
14.3 Definition of important system units . . . 87

Index . . . 89

1 About this document

1.1 Document function

These Operating Instructions contain all the information required in the various life cycle phases of the device: from product identification, incoming acceptance and storage, to installation, connection, operation and commissioning, through to troubleshooting, maintenance and disposal.

1.2 Symbols

1.2.1 Safety symbols

DANGER
This symbol alerts you to a dangerous situation. Failure to avoid this situation will result in serious or fatal injury.

WARNING
This symbol alerts you to a potentially dangerous situation. Failure to avoid this situation can result in serious or fatal injury.

CAUTION
This symbol alerts you to a potentially dangerous situation. Failure to avoid this situation can result in minor or medium injury.

NOTICE
This symbol alerts you to a potentially harmful situation. Failure to avoid this situation can result in damage to the product or something in its vicinity.

1.2.2 Symbols for certain types of information

Symbol	Meaning
✓	**Permitted** Procedures, processes or actions that are permitted.
✓ ✓	**Preferred** Procedures, processes or actions that are preferred.
✗	**Forbidden** Procedures, processes or actions that are forbidden.
i	**Tip** Indicates additional information.
	Reference to documentation
	Reference to page
	Reference to graphic
▶	Notice or individual step to be observed
1., 2., 3....	Series of steps
↳	Result of a step
?	Help in the event of a problem
	Visual inspection

1.2.3 Electrical symbols

⎓	Direct current	∼	Alternating current
≂	Direct current and alternating current	⏚	**Ground connection** A grounded terminal which, as far as the operator is concerned, is grounded via a grounding system.

1.2.4 Symbols in graphics

Symbol	Meaning	Symbol	Meaning
1, 2, 3,...	Item numbers	1., 2., 3....	Series of steps
A, B, C, ...	Views	**A-A, B-B, C-C, ...**	Sections
EX	Hazardous area	EX	Safe area (non-hazardous area)

1.2.5 Tool symbols

Symbol	Meaning
A0011220	Flat-blade screwdriver
A0011219	Phillips screwdriver
A0011221	Allen key
A0011222	Open-end wrench
A0013442	Torx screwdriver

1.3 Documentation

For an overview of the scope of the associated Technical Documentation, refer to the following:

- *Device Viewer* (www.endress.com/deviceviewer): Enter the serial number from the nameplate
- *Endress+Hauser Operations app*: Enter serial number from nameplate or scan matrix code on nameplate.

The following document types are available in the Downloads area of the Endress+Hauser website (www.endress.com/downloads), depending on the device version:

Document type	Purpose and content of the document
Technical Information (TI)	**Planning aid for your device** The document contains all the technical data on the device and provides an overview of the accessories and other products that can be ordered for the device.
Brief Operating Instructions (KA)	**Guide that takes you quickly to the 1st measured value** The Brief Operating Instructions contain all the essential information from incoming acceptance to initial commissioning.

Document type	Purpose and content of the document
Operating Instructions (BA)	**Your reference document** The Operating Instructions contain all the information that is required in various phases of the life cycle of the device: from product identification, incoming acceptance and storage, to mounting, connection, operation and commissioning through to troubleshooting, maintenance and disposal.
Description of Device Parameters (GP)	**Reference for your parameters** The document provides a detailed explanation of each individual parameter. The description is aimed at those who work with the device over the entire life cycle and perform specific configurations.
Safety instructions (XA)	Depending on the approval, safety instructions for electrical equipment in hazardous areas are also supplied with the device. These are an integral part of the Operating Instructions. The nameplate indicates which Safety Instructions (XA) apply to the device.
Supplementary device-dependent documentation (SD/FY)	Always comply strictly with the instructions in the relevant supplementary documentation. The supplementary documentation is a constituent part of the device documentation.

1.4 Change history

Release

The firmware version on the nameplate and in the Operating Instructions indicates the device release: XX.YY.ZZ (example 1.02.01).

XX Change to main version.
No longer compatible. The device and Operating Instructions change.

YY Change to functions and operation.
Compatible. The Operating Instructions change.

ZZ Bug fixes and internal changes.
No changes to the Operating Instructions.

Date	Firmware version	Software changes	Documentation
07/2010	01.00.xx	Original software	BA294K/09/en/07.10
07/2011	01.02.xx	Output tariff 1/2 to OC	BA00294K/09/EN/01.11
09/2011	01.03.xx	Web server port is configurable	BA00294K/09/EN/02.11
12/2013	01.04.xx	Switching temperature for bidirectional measurement can be switched off	BA00294K/09/EN/03.13
10/2014	01.04.xx	-	BA00294K/09/EN/04.14
01/2019	01.04.xx	-	BA00294K/09/EN/05.18
02/2024	01.05.01	Addition of units MJ/h, GJ/h, kPa	BA00294K/09/EN/06.24
05/2025	01.05.xx	Bug fixing	BA00294K/09/EN/07.25

2 Basic safety instructions

Safe and reliable operation of the device is only ensured if the Operating Instructions have been read and the safety instructions contained therein are observed.

2.1 Requirements for the personnel

The personnel for installation, commissioning, diagnostics and maintenance must fulfill the following requirements:
- ▶ Trained, qualified specialists must have a relevant qualification for this specific function and task.
- ▶ Are authorized by the plant owner/operator.
- ▶ Are familiar with federal/national regulations.
- ▶ Before starting work, read and understand the instructions in the manual and supplementary documentation as well as the certificates (depending on the application).
- ▶ Follow instructions and comply with basic conditions.

The operating personnel must fulfill the following requirements:
- ▶ Are instructed and authorized according to the requirements of the task by the facility's owner-operator.
- ▶ Follow the instructions in this manual.

2.2 Intended use

The steam calculator is a flow computer for calculating the mass and energy flow of steam. The mains-powered device is designed for use in industrial environments.

- The manufacturer is not liable for harm caused by improper or unintended use. The device must not be converted or modified in any way.
- The device may only be operated when installed.

2.3 Workplace safety

For work on and with the device:
- ▶ Wear the required personal protective equipment according to federal/national regulations.

2.4 Operational safety

Damage to the device!
- ▶ Operate the device in proper technical condition and fail-safe condition only.
- ▶ The operator is responsible for the interference-free operation of the device.

Modifications to the device

Unauthorized modifications to the device are not permitted and can lead to unforeseeable dangers!
- ▶ If modifications are nevertheless required, consult with the manufacturer.

Repair

To ensure continued operational safety and reliability:
- ▶ Carry out repairs on the device only if they are expressly permitted.
- ▶ Observe federal/national regulations pertaining to the repair of an electrical device.
- ▶ Use only original spare parts and accessories.

2.5 Product safety

This product is designed in accordance with good engineering practice to meet state-of-the-art safety requirements and has been tested and left the factory in a condition in which it is safe to operate.

2.6 IT security

The manufacturer warranty is valid only if the product is installed and used as described in the Operating Instructions. The product is equipped with security mechanisms to protect it against any inadvertent changes to the settings.

IT security measures, which provide additional protection for the product and associated data transfer, must be implemented by the operators themselves in line with their security standards.

3 Product description

3.1 Product design

The steam calculator is used for recording and billing steam mass and energy flow in systems with saturated or superheated steam. The calculation is based on the process values measured for volume flow, temperature and/or pressure. The calculator is suitable for connecting and supplying all common flow transmitters, temperature sensors and pressure sensors.

The device uses the IAPWS IF97 standard to calculate the mass flow and energy flow of steam. Here, the input variables pressure and temperature are used to calculate the density and enthalpy of steam. The compensation of the differential pressure flow measurement and the electronic adjustment of the temperature sensor (sensor-transmitter matching) with the calculator enable highly accurate and reliable measurements even under dynamic process conditions. Remote reading of the stored data is possible via Ethernet IP, Modbus or M-Bus.

4 Incoming acceptance and product identification

4.1 Incoming acceptance

On receipt of the delivery:

1. Check the packaging for damage.
   ↳ Report all damage immediately to the manufacturer.
   Do not install damaged components.
2. Check the scope of delivery using the delivery note.
3. Compare the data on the nameplate with the order specifications on the delivery note.
4. Check the technical documentation and all other necessary documents, e.g. certificates, to ensure they are complete.

ℹ If one of the conditions is not satisfied, contact the manufacturer.

4.1.1 Product identification

The device can be identified in the following ways:
- Nameplate specifications
- Enter the serial number from the nameplate into *Device Viewer* (www.endress.com/deviceviewer): all the information about the device and an overview of the Technical Documentation supplied with the device are displayed.
- Enter the serial number from the nameplate into the *Endress+Hauser Operations App* or scan the 2-D matrix code (QR code) on the nameplate with the *Endress+Hauser Operations App*: all the information about the device and the technical documentation pertaining to the device is displayed.

Nameplate

Do you have the correct device?

The nameplate provides you with the following information on the device:
- Manufacturer identification, device designation
- Order code
- Extended order code
- Serial number
- Tag name (TAG) (optional)
- Technical values, e.g. supply voltage, current consumption, ambient temperature, communication-specific data (optional)
- Degree of protection
- Approvals with symbols
- Reference to Safety Instructions (XA) (optional)

▶ Compare the information on the nameplate with the order.

Name and address of manufacturer

Name of manufacturer:	Endress+Hauser Wetzer GmbH + Co. KG
Address of manufacturer:	Obere Wank 1, D-87484 Nesselwang or www.endress.com

4.1.2 Storage and transport

Storage temperature: −30 to +70 °C (−22 to +158 °F)

Maximum relative humidity 80 % for temperatures up to 31 °C (87.8 °F), decreasing linearly to 50 % relative humidity at 40 °C (104 °F).

Pack the device for storage and transportation in such a way that it is reliably protected against impact and external influences. The original packaging provides optimum protection.

Avoid the following environmental influences during storage:
- Direct sunlight
- Proximity to hot objects
- Mechanical vibration
- Aggressive media

5 Installation

5.1 Installation conditions

With the appropriate accessories, the device with field housing is suitable for wall mounting, pipe mounting, panel mounting and DIN rail installation.

The orientation is determined by the readability of the display. Connections and outputs are fed out of the bottom of the device. The cables are connected via coded terminals.

Operating temperature range: −20 to +60 °C (−4 to +140 °F)

For further information, see the "Technical data" section of the Operating Instructions.

NOTICE

Overheating of the device due to insufficient cooling

- Always ensure adequate cooling of the device to prevent heat accumulation. Operating the device in the upper temperature limit range decreases the operating life of the display.

5.2 Dimensions

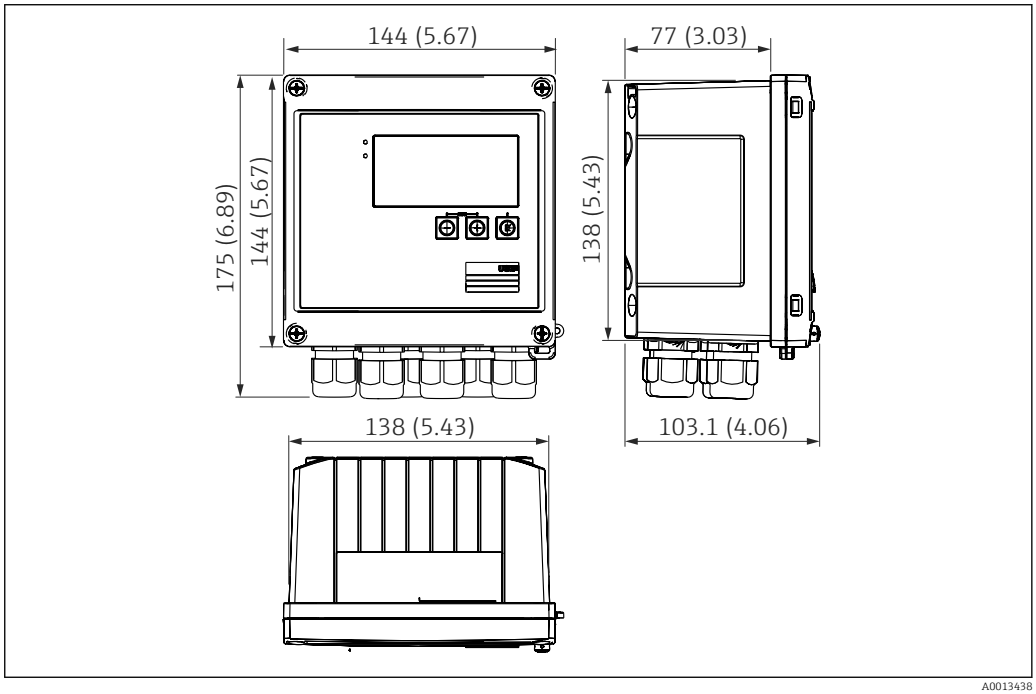

1 *Dimensions of the device in mm (in)*

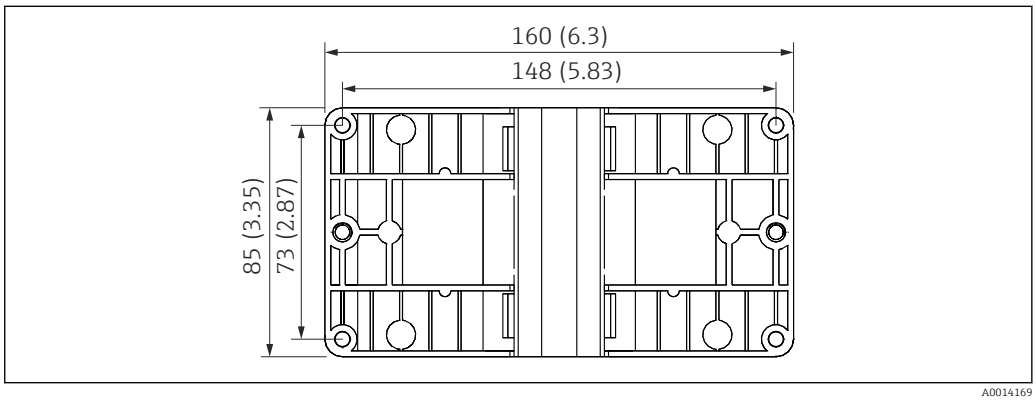

2 *Dimensions of the mounting plate for wall, pipe and panel mounting in mm (in)*

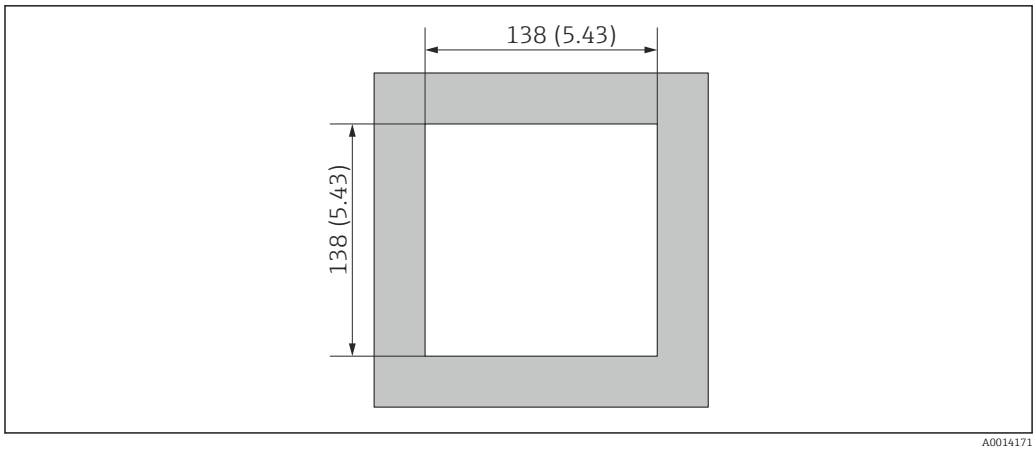

3 *Dimensions of the panel cutout in mm (in)*

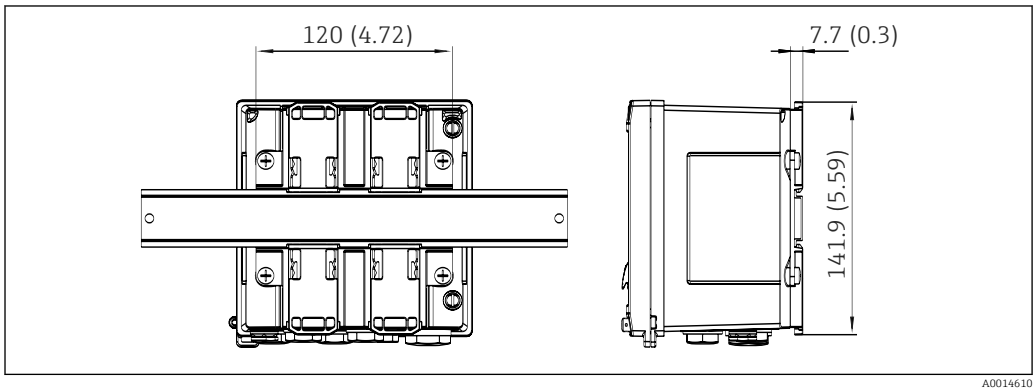

4 *Dimensions of DIN rail adapter in mm (in)*

5.3 Installing the device

5.3.1 Wall mounting

1. Use the mounting plate as the template for drilled holes, dimensions → 2, 9
2. Attach the device to the mounting plate and fasten it in place from the rear using 4 screws.
3. Fasten the mounting plate to the wall using 4 screws.

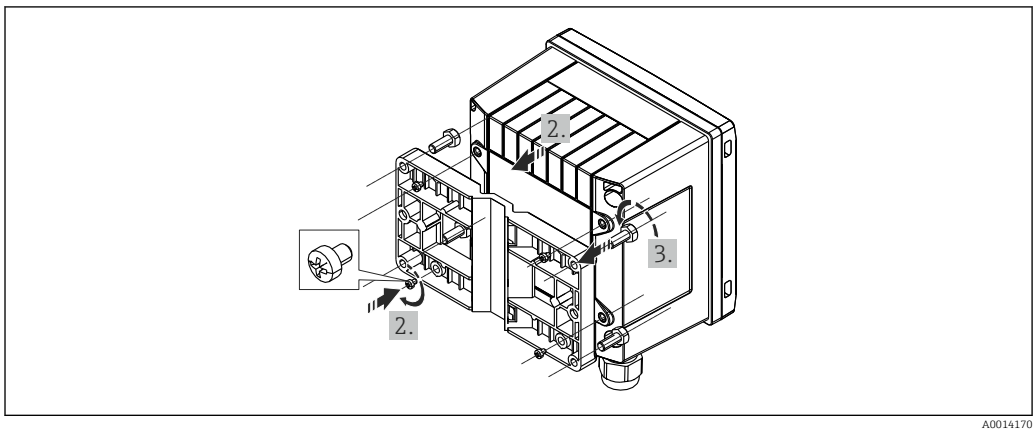

5 *Wall mounting*

5.3.2 Panel mounting

1. Make the panel cutout in the required size, dimensions → 3, 10
2. 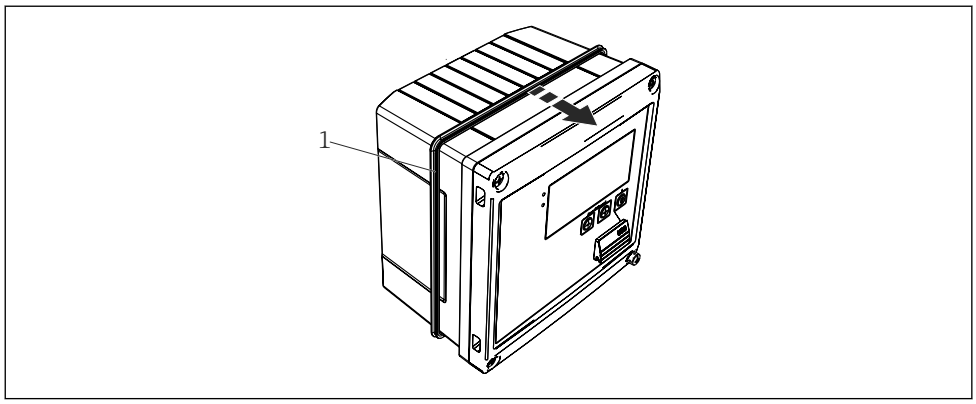

A0014172

6 *Panel mounting*

Attach the seal (item 1) to the housing.

3. 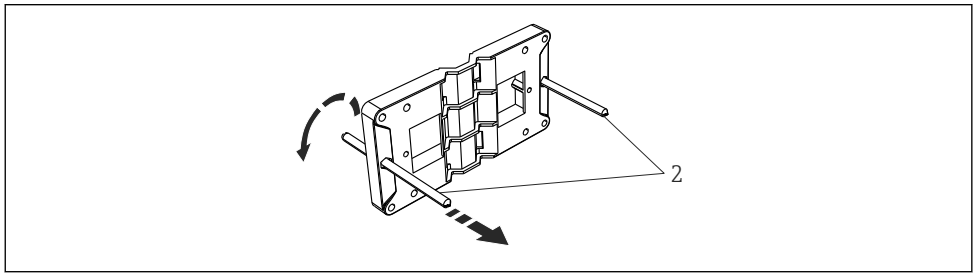

A0014173

7 *Preparing the mounting plate for panel mounting*

Screw the threaded rods (item 2) into the mounting plate (dimensions → 2, 9).

4. 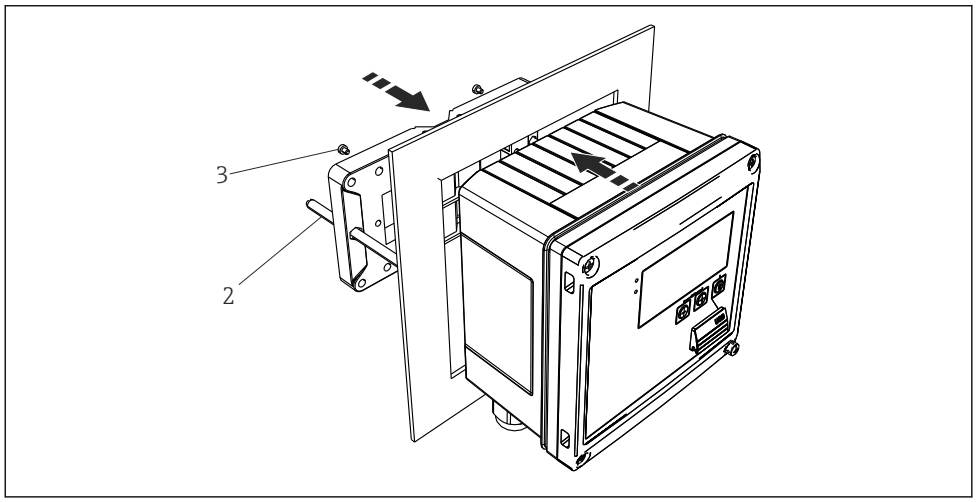

A0014174

8 *Panel mounting*

Push the device into the panel cutout from the front and attach the mounting plate to the device from the rear using the 4 screws provided (item 3).

5. Fasten the device in place by tightening the threaded rods.

5.3.3 Support rail/DIN rail (as per EN 50 022)

1.

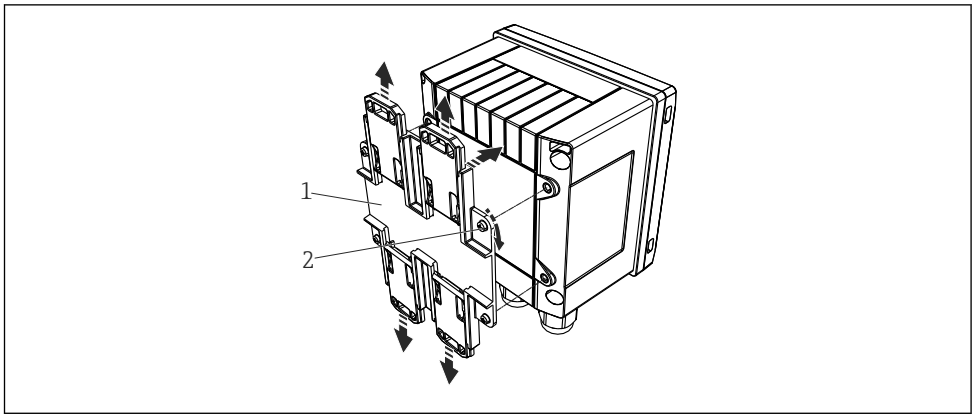

9 Preparing for DIN rail mounting

Fasten the DIN rail adapter (item 1) to the device using the screws provided (item 2) and open the DIN rail clips.

2.

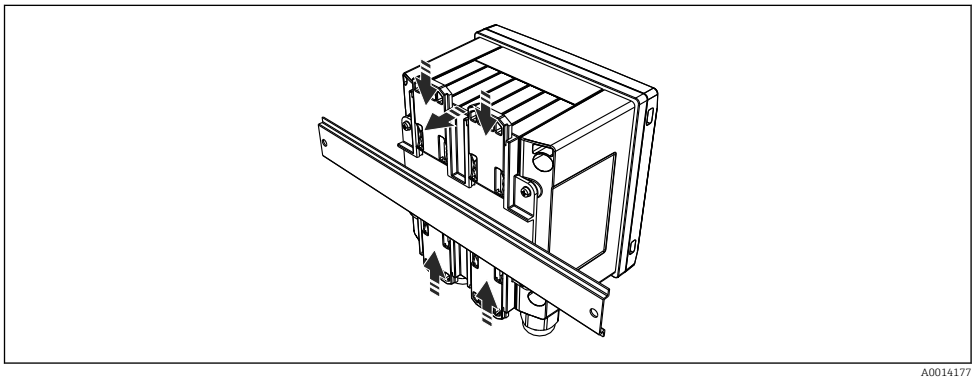

10 DIN rail mounting

Attach the device to the DIN rail from the front and close the DIN rail clips.

5.3.4 Pipe mounting

1.

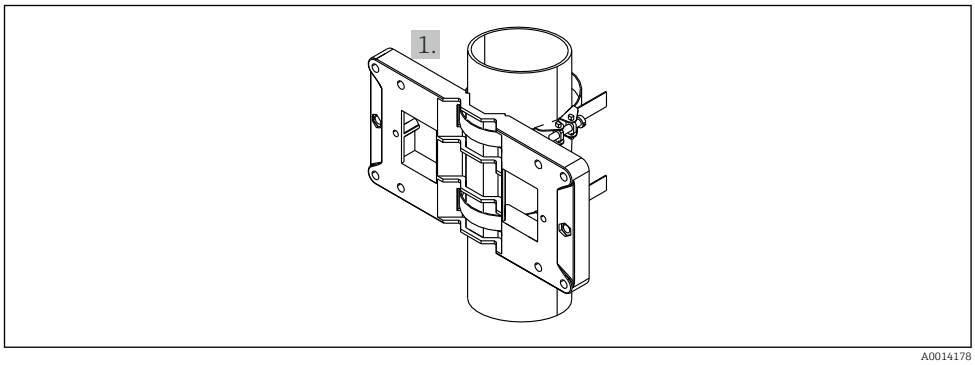

11 Preparing for pipe mounting

Pull the steel belts through the mounting plate (dimensions → 2, 9) and fasten them to the pipe.

2.

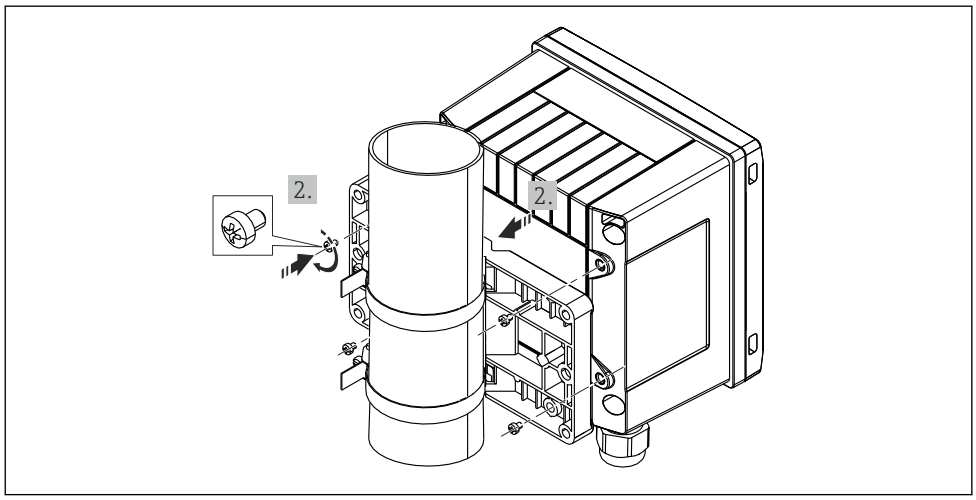

12 *Pipe mounting*

Attach the device to the mounting plate and fasten it in place using the 4 screws provided.

5.4 Installation instructions for temperature sensors

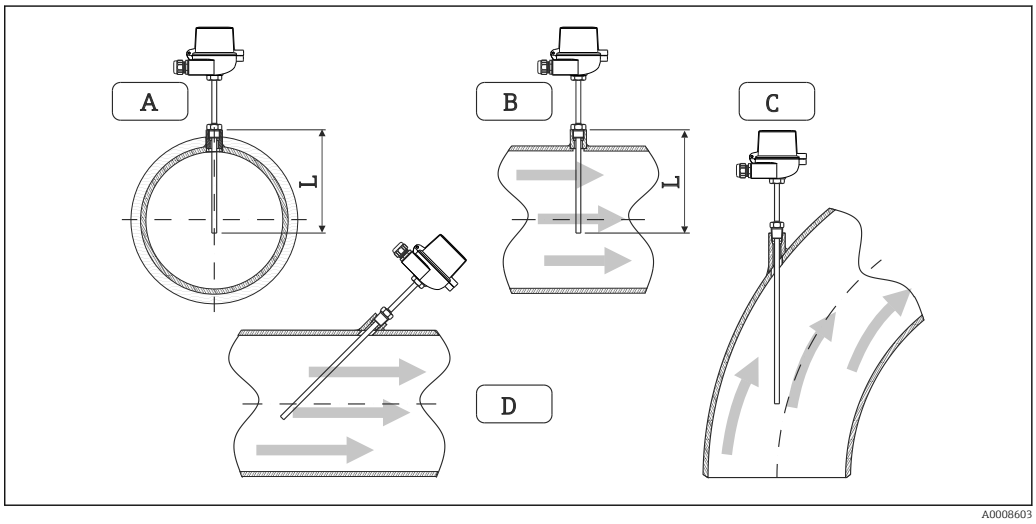

13 *Installation types for temperature sensors*

A - B For pipelines with a small cross-section, the sensor tip must reach as far as the piping axis or a little farther (=L).
C - D Slanted orientation.

The installation depth of the thermometer can influence the measurement accuracy. If the installation depth is insufficient, heat conduction via the process connection and the container wall can cause measurement errors. For installation in a pipe, therefore, the recommended installation depth ideally corresponds to half of the pipe diameter.

- Installation options: Pipes, tanks or other plant components
- Minimum immersion depth = 80 to 100 mm (3.15 to 3.94 in)
  The immersion depth should correspond to at least 8 times the thermowell diameter. Example: Thermowell diameter 12 mm (0.47 in) x 8 = 96 mm (3.8 in). We recommend a standard immersion depth of 120 mm (4.72 in).

For pipes with small nominal diameters, ensure that the tip of the thermowell extends far enough into the process so that it also protrudes past the axis of the pipe (→ 13, 13, item A and B). Another solution may be diagonal installation (→ 13, 13, item C and D). When determining the immersion length and installation depth, all parameters of the thermometer and of the process to be measured must be taken into account (e.g. flow velocity, process pressure).

Refer also to the installation recommendations EN 1434-2 (D), Figure 8.

Detailed information: BA01915T

5.5 Pressure measuring cell installation instructions

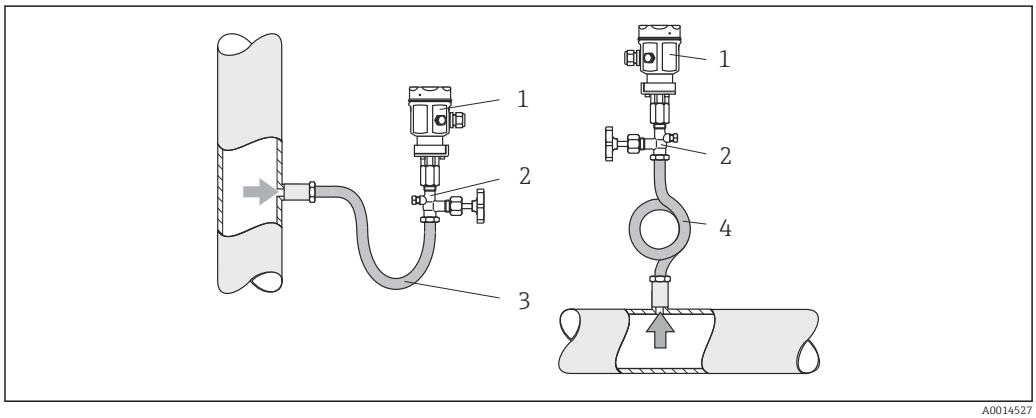

14 Measuring arrangement for pressure measurement in steams

1 Pressure measuring cell
2 Shutoff device
3 U-shaped water pocket
4 O-shaped water pocket

- Mount the pressure measuring cell with the siphon above the tapping point.
  The siphon reduces the temperature to almost ambient temperature.
- Fill the siphon with liquid before commissioning.

5.6 Post-installation check

Perform the following checks after installing the device:

Device condition and specifications	Notes
Is the device undamaged?	Visual inspection
Is the seal undamaged?	Visual inspection
Is the device fixed securely to the wall or mounting plate?	-
Is the housing cover firmly mounted?	-
Do the ambient conditions match the device specification (e.g. ambient temperature, measuring range etc.)?	See "Technical data" section.

6 Electrical connection

6.1 Connecting requirements

WARNING

Danger! Electric voltage

- The entire connection of the device must take place while the device is de-energized.

CAUTION

Pay attention to additional information provided

- Before commissioning the device, make sure that the supply voltage matches the voltage specifications on the nameplate.
- Provide a suitable switch or circuit breaker in building installation. This switch must be provided close to the device (within easy reach) and marked as a circuit breaker.
- An overcurrent protection element (rated current ≤ 10 A) is required for the power cable.

For installation of the steam calculator and the associated components, observe the general instructions according to EN 1434 Part 6.

6.2 Connecting the device

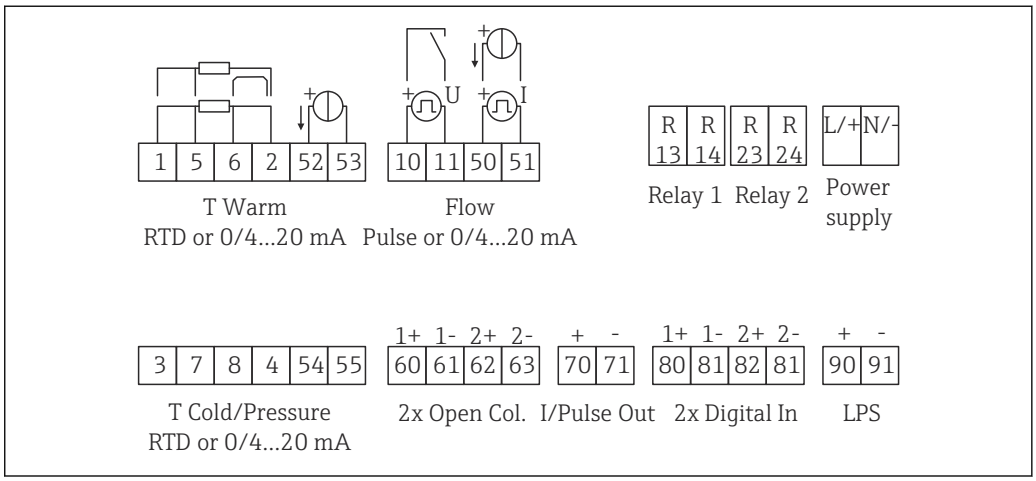

15 *Connection diagram of the device*

Terminal assignment

- In the case of heat differential /T measurement, the temperature sensor for T condensate must be connected to the T Warm terminals and the temperature sensor for T steam to the T Cold terminals.
- In the case of heat differential /p measurement, the temperature sensor for T condensate must be connected to the T Warm terminals.

Terminal	Terminal assignment	Inputs
1	+ RTD power supply	Temperature of steam (Optionally RTD or current input)
2	- RTD power supply	
5	+ RTD sensor	
6	- RTD sensor	
52	+ 0/4 to 20 mA input	

53	Signal ground for 0/4 to 20 mA input	
3	+ RTD power supply	Steam pressure
4	- RTD power supply	
7	+ RTD sensor	
8	- RTD sensor	
54	+ 0/4 to 20 mA input	
55	Signal ground for 0/4 to 20 mA input	
10	+ pulse input (voltage)	Flow (Optionally pulse or current input)
11	- pulse input (voltage)	
50	+ 0/4 to 20 mA or current pulse (PFM)	
51	Signal ground for 0/4 to 20 mA input flow	
80	+ digital input 1 (switch input)	▪ Start tariff counter 1 ▪ Time synchronization ▪ Lock the device
81	- digital input (terminal 1)	
82	+ digital input 2 (switch input)	▪ Start tariff counter 2 ▪ Time synchronization ▪ Lock the device
81	- digital input (terminal 2)	
		Outputs
60	+ pulse output 1 (open collector)	Energy, volume or tariff counter. Alternative: limit values/alarms
61	- pulse output 1 (open collector)	
62	+ pulse output 2 (open collector)	
63	- pulse output 2 (open collector)	
70	+ 0/4 to 20 mA/pulse output	Current values (e.g. power) or counter values (e.g. energy)
71	- 0/4 to 20 mA/pulse output	
13	Relay normally open (NO)	Limit values, alarms
14	Relay normally open (NO)	
23	Relay normally open (NO)	
24	Relay normally open (NO)	
90	24 V Sensor power supply (LPS)	24 V Power supply (e.g. for sensor power supply)
91	Power supply ground	
		Power supply
L/+	L for AC + for DC	
N/-	N for AC - for DC	

6.2.1 Open the housing

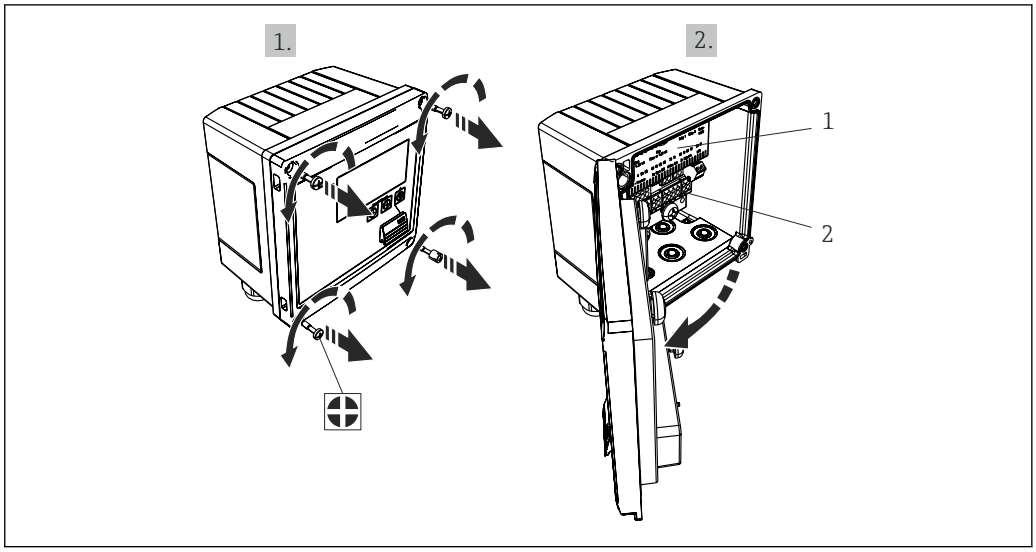

A0014071

16 *Opening the housing of the device*

1 Terminal assignment labeling
2 Terminals

6.3 Connecting the sensors

6.3.1 Flow

Flow sensors with external power supply

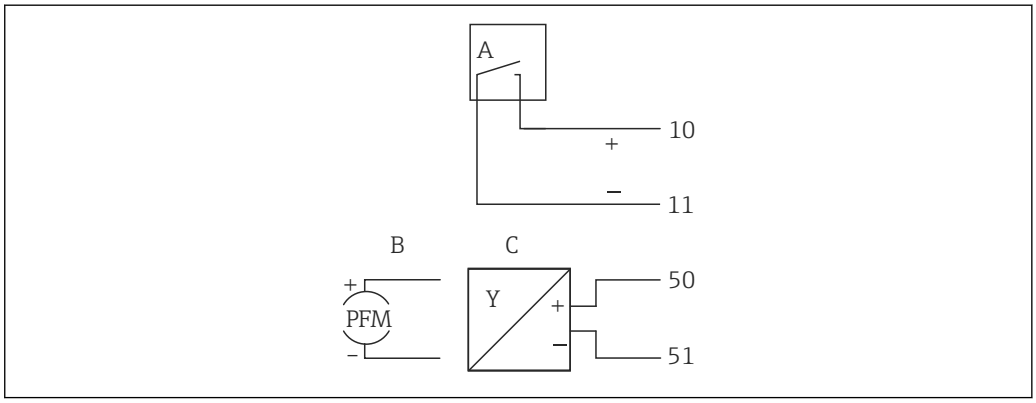

A0013521

17 *Connecting a flow sensor*

A Voltage pulses or contact sensors including EN 1434 Type IB, IC, ID, IE
B Current pulses
C 0/4 to 20 mA signal

Flow sensors with power supply via the steam calculator

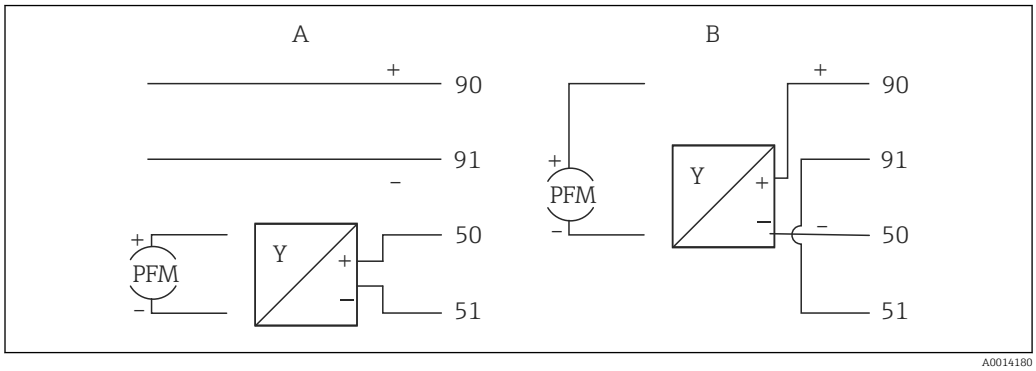

18 Connecting active flow sensors

A 4-wire sensor
B 2-wire sensor

Settings for flow sensors with pulse output

The input for voltage pulses and contact sensors is divided into different types according to EN 1434 and provides a supply for switching contacts.

Pulse output of the flow sensor	Setting at the Rx33	Electrical connection	Comment
Mechanical contact A0015360	Pulse ID/IE up to 25 Hz	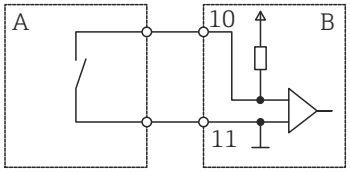 A0015354 *A Sensor* *B Rx33*	As an alternative, it is possible to choose "Pulse IB/IC+U" up to 25 Hz. The current flow via the contact is then lower (approx. 0.05 mA instead of approx. 9 mA). Advantage: lower power consumption, disadvantage: less immunity to interference.
Open collector (NPN) A0015361	Pulse ID/IE up to 25 Hz or up to 12.5 kHz	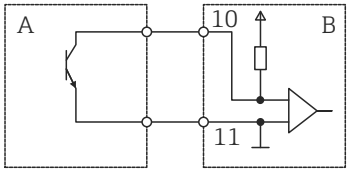 A0015355 *A Sensor* *B Rx33*	As an alternative, it is possible to choose "Pulse IB/IC+U". The current flow via the transistor is then lower (approx. 0.05 mA instead of approx. 9 mA). Advantage: lower power consumption, disadvantage: less immunity to interference.
Active voltage 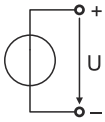 A0015362	Pulse IB/IC+U	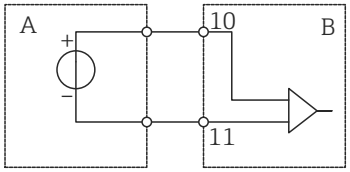 A0015356 *A Sensor* *B Rx33*	The switching threshold is between 1 V and 2 V

Pulse output of the flow sensor	Setting at the Rx33	Electrical connection	Comment
Active current 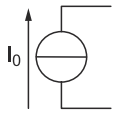 A0015363	Pulse I	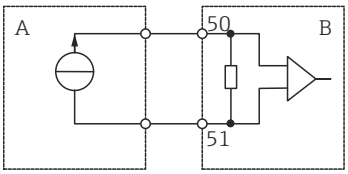 A0015357 *A Sensor* *B Rx33*	The switching threshold is between 8 mA and 13 mA
Namur sensor (as per EN 60947-5-6)	Pulse ID/IE up to 25 Hz or up to 12.5 kHz	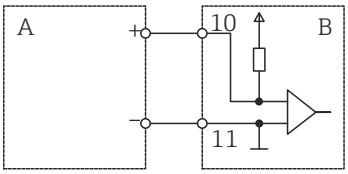 A0015359 *A Sensor* *B Rx33*	No monitoring for short circuit or line break takes place.

Voltage pulses and transmitters according to Class IB and IC (low switching thresholds, small currents)	≤ 1 V corresponds to Low level ≥ 2 V corresponds to High level U max 30 V, U no-load: 3 to 6 V	Floating contacts, reed transmitters
Transmitters to Class ID and IE for higher currents and power supplies	≤ 1.2 mA corresponds to Low level ≥ 2.1 mA corresponds to High level U no-load: 7 to 9 V	

6.3.2 Temperature

Connecting the RTD sensors	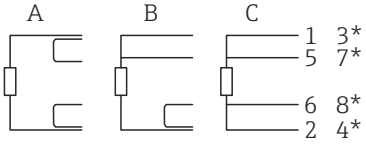 A0014529 A = 2-wire connection B = 3-wire connection C = 4-wire connection * only use in event of energy calculation with heat differential /T, temperature sensor in steam Terminals 1, 2, 5, 6: temperature Terminals 3, 4, 7, 8: temperature

Temperature transmitter connection	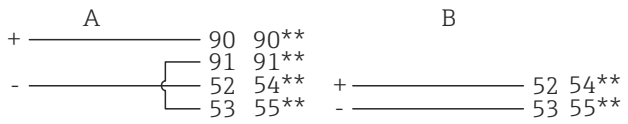 A0014528 A = without external power supply of the transmitter, B = with external power supply of the transmitter ** only use in event of energy calculation with heat differential /T, temperature sensor in steam Terminals 90, 91: transmitter power supply Terminals 52, 53: temperature input

To ensure the highest level of accuracy, we recommend using the RTD 4-wire connection, as this compensates for measurement errors caused by the mounting location of the sensors or the line length of the connecting cables.

6.3.3 Pressure

Pressure measuring cell connection	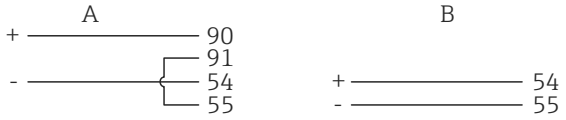 A0015152 A = 2-wire sensor with power supply via the steam calculator B = 4-wire sensor with external power supply Terminals 90, 91: transmitter power supply Terminals 54, 55: pressure

6.4 Outputs

6.4.1 Analog output (active)

This output can be used either as a 0/4 to 20 mA current output or as a voltage pulse output. The output is galvanically isolated. Terminal assignment, → 📄 15.

6.4.2 Relay

The two relays can be switched in case of fault messages or a limit value violation.

Relay 1 or 2 can be selected under **Setup** → **Advanced setup** → **System** → **Fault switching**.

Limit values are assigned under **Setup** → **Advanced setup** → **Application** → **Limits**. Possible settings for limit values are described in the "Limit values" section, .

6.4.3 Pulse output (active)

Voltage level:
- 0 to 2 V corresponds to Low level
- 15 to 20 V corresponds to High level

Maximum output current: 22 mA

6.4.4 Open collector output

The two digital outputs can be used as status or pulse outputs. Make the selection in the following menus **Setup** → **Advanced setup** or **Expert** → **Outputs** → **Open collector**

6.5 Communication

The USB interface is always active and can be used independently of other interfaces. Parallel operation of multiple optional interfaces, e.g. fieldbus and Ethernet, is not possible.

6.5.1 Ethernet TCP/IP (optional)

The Ethernet interface is galvanically isolated (test voltage: 500 V). A standard patch cable (e.g. CAT5E) can be used to connect the Ethernet interface. A special cable gland is available for this purpose which allows users to guide pre-terminated cables through the housing. Via the Ethernet interface, the device can be connected using a hub or a switch or directly to office equipment.

- Standard: 10/100 Base T/TX (IEEE 802.3)
- Socket: RJ-45
- Max. cable length: 100 m

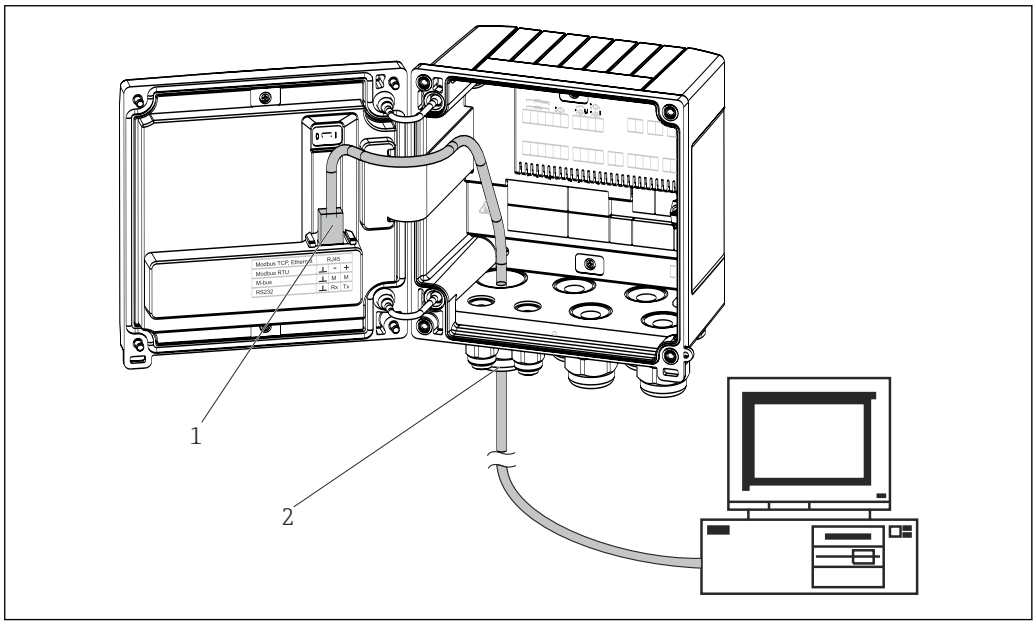

19 Connection of Ethernet TCP/IP, Modbus TCP

1 Ethernet, RJ45
2 Cable entry for Ethernet cable

6.5.2 Modbus TCP (optional)

The Modbus TCP interface is used to connect the device to higher-order systems to transmit all measured values and process values. The Modbus TCP interface is physically identical to the Ethernet interface → 19, 21

The device can only be read by a Modbus master.

Detailed information for Modbus register assignment: www.endress.com

6.5.3 Modbus RTU (optional)

The Modbus RTU (RS-485) interface is galvanically isolated (test voltage: 500 V) and used to connect the device to higher-level systems to transmit all measured values and process values. The connection is made via a 3-pole pluggable terminal in the housing cover.

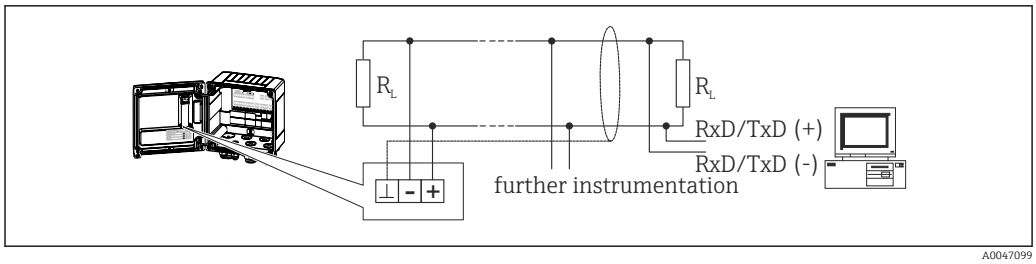

20 Connection of Modbus RTU

6.5.4 M-Bus (optional)

The M-Bus (Meter Bus) interface is galvanically isolated (test voltage: 500 V) and used to connect the device to higher-level systems to transmit all measured values and process values. The connection is made via a 3-pole pluggable terminal in the housing cover.

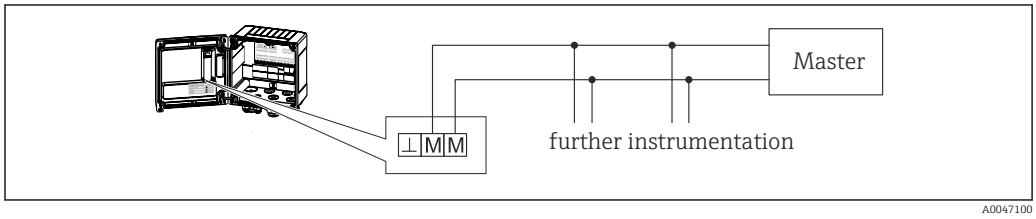

21 Connection of M-Bus

6.6 Post-connection check

Perform the following checks after completing electrical installation of the device:

Device conditions and specifications	**Notes**
Is the device or cable damaged (visual inspection)?	-
Electrical connection	**Notes**
Does the supply voltage match the information on the nameplate?	100 to 230 V AC/DC (±10 %) (50/60 Hz) 24 V DC (−50 % / +75 %) 24 V AC (±50 %) 50/60 Hz
Are the mounted cables strain-relieved?	-
Are the power supply and signal cables connected correctly?	See wiring diagram on the housing

7 Operation options

7.1 Overview of operation options

The device can be configured using operating keys or with the help of the "FieldCare" operating software.

The operating software, including interface cable, is available as an order option.

Parameter configuration is locked if the device is locked by the write protection switch → 25, the user code or digital input.

For details, see "Access protection" in the "Commissioning" section of the Operating Instructions.

7.2 Structure and function of the operating menu

A complete overview of the operating matrix, incl. all of the configurable parameters, can be found in the appendix.

Language	Picklist with all available operating languages. Select the language of the device.

Display/operation menu	▪ Select the group for display (alternate automatically or fixed display group) ▪ Configure brightness and contrast of display ▪ Display saved analyses (day, month, year, billing date, totalizer)

Setup menu	The parameters for quick commissioning of the device can be configured in this setup. The advanced setup contains all of the essential parameters for configuring the device function. ▪ Units ▪ Pulse value, value ▪ Date and time ▪ Pressure Parameters for quick commissioning Advanced setup (settings that are not essential for basic operation of the device) Special settings can also be configured via the "Expert" menu.

Diagnostics menu	Device information and service functions for a quick device check ▪ Diagnostic messages and list ▪ Event logbook ▪ Device information ▪ Simulation ▪ Measured values, outputs

Expert menu	The Expert menu provides access to all of the operating positions of the device, including fine-tuning and service functions. ▪ Skip directly to the parameter via Direct Access (on device only) ▪ Service code to display service parameters (via PC operating software only) ▪ System (settings) ▪ Inputs ▪ Outputs ▪ Application ▪ Diagnostic

7.3 Display and operating elements

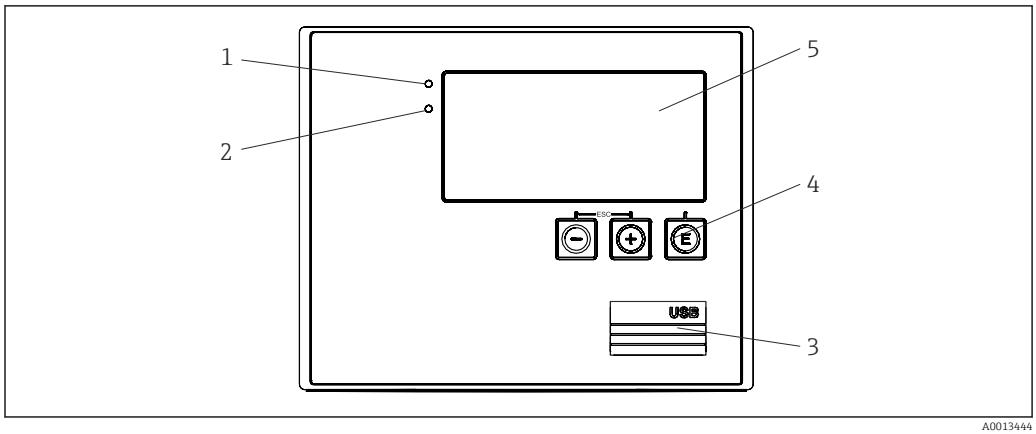

22 Display and operating elements of the device

1 *Green LED, "Operation"*
2 *Red LED, "Fault message"*
3 *USB connection for configuration*
4 *Operating keys: -, +, E*
5 *160x80 dot-matrix display*

Green LED if voltage present, red LED in the event of an alarm/error. Green LED is always lit once the device is supplied with power.

Red LED flashing slowly (approx. 0.5 Hz): The device has been set to the bootloader mode.

Red LED flashing quickly (approx. 2 Hz): In normal operation: maintenance required. During firmware update: data transmission in progress.

Red LED remains lit: Device error.

7.3.1 Operating elements

3 operating keys, "-", "+", "E"

Esc/Back function: Press "-" and "+" simultaneously.

Enter/Confirm entry function: Press "E"

Write protection switch

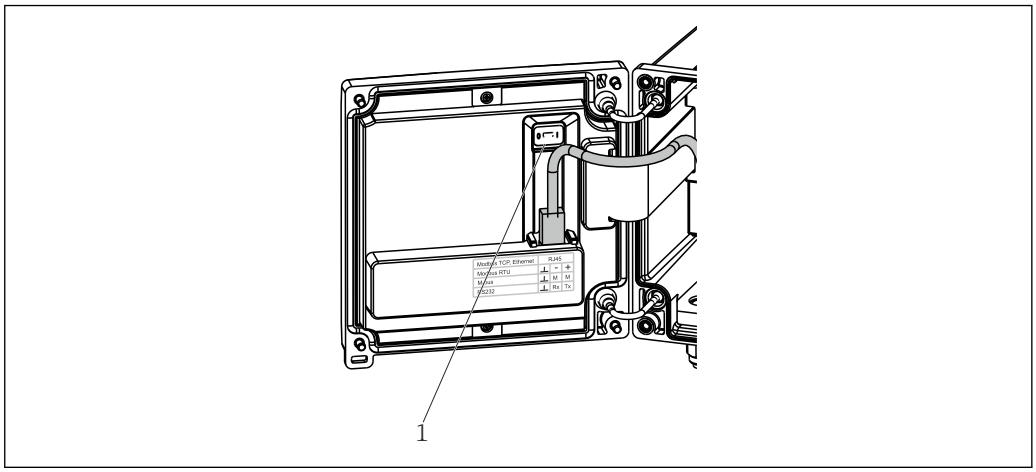

A0015168

23 Write protection switch

1 Write protection switch on rear of housing cover

7.3.2 Display

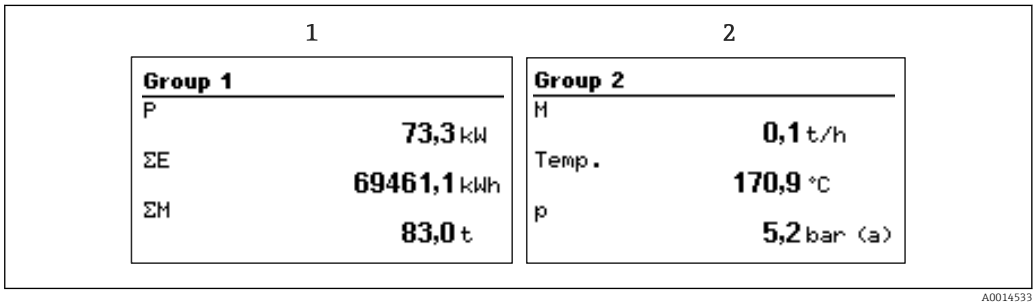

A0014533

24 Steam calculator display (example)

1 Group 1 display
2 Group 2 display

7.4 Access to the operating menu via "FieldCare Device Setup"

To configure the device using the FieldCare Device Setup software, connect the device to your PC via the USB interface.

Establishing the connection

1. Start FieldCare.
2. Connect the device to the PC via USB.
3. Create project in File/New menu.
4. Select Communication DTM (CDI Communication USB).
5. Add device EngyCal RS33.
6. Click Connect.
7. Start parameter configuration.

Continue with device configuration in accordance with the Operating Instructions for the device. The complete Setup menu, i.e. all of the parameters listed in these Operating Instructions, can also be found in the FieldCare Device Setup.

NOTICE

Undefined switching of outputs and relays

▶ During configuration with FieldCare, the device may assume undefined statuses! This may result in the undefined switching of outputs and relays.

8 Commissioning

8.1 Post-installation check

Perform the following checks prior to commissioning the device:
- See "Post-installation check" section, → 14.
- Post-connection check using the checklist in the "Post-connection check" section, → 22.

8.2 Switching on the device

After the operating voltage is applied, the display and the green LED are illuminated. The device is now operational and can be configured via the keys or the "FieldCare" parameterization software .

Remove the protective film from the device as this would otherwise affect the readability of the display.

8.3 Quick commissioning

The standard application for steam mass/energy is commissioned in just a few moments by simply configuring 5 operating parameters in the **Setup** menu.

Prerequisites for quick commissioning:

- Flow transmitter with pulse output
- RTD temperature sensor, 4-wire direct connection
- Absolute pressure sensor with current output 4 to 20 mA

Menu/setup
- **Units**: Select unit type (SI/US)
- **Pulse value**: Select the unit of the pulse value of the flow transmitter
- **Value**: Enter the pulse value of the flow sensor
- **Date/time**: Set the date and time
- **Pressure**: Set the measuring range for the pressure measuring cell

The device is now operational and ready to measure the steam mass and heat energy.

The device functions — such as data logging, tariff function, bus integration, and the scaling of current inputs for flow or temperature are configured in the **Advanced setup** menu → 32 or in the **Expert** → 44menu.

Here, you can also find the settings for the inputs (e.g. when connecting a gauge pressure measuring cell, flow transmitter with a current output etc.).

- Inputs/flow:
  Select the signal type and enter the start and end of the measuring range (for current signal) or the pulse value of the flow transmitter.
- Inputs/temperature:
  Select the signal type and enter the type of connection or the start and end of the measuring range (for current signals).
- Inputs/pressure:
  Select the signal type and the pressure unit (absolute or gauge) and enter the lower range limit and upper range limit.

8.4 Applications

The following is an explanation of the application possibilities, including brief operating instructions for the respective device settings.

The device can be used for the following applications:
- Steam mass and energy, → 27
- Tariff counter for steam mass and energy flow, → 31

8.4.1 Steam mass and energy

Calculation of the mass flow and the quantity of heat it contains at the output of a steam generator or for individual consumers.

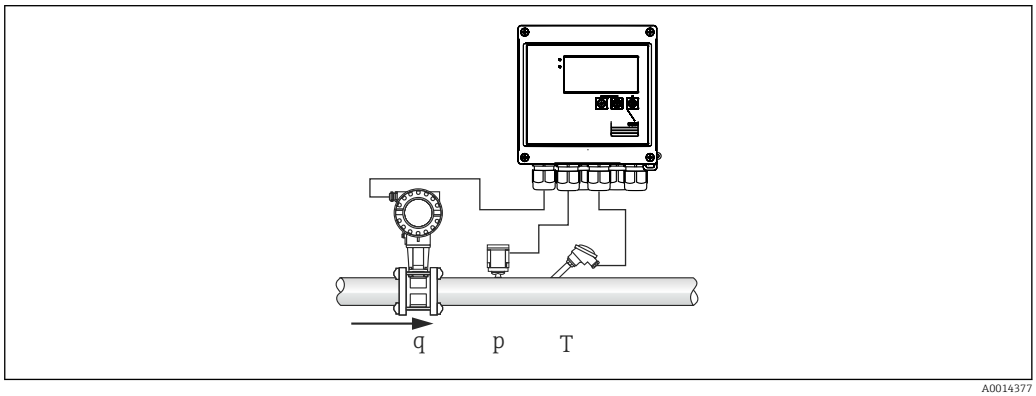

25 *Steam mass and energy application*

Input signals:

Flow, Qv (pulse input or current input)

Temperature (RTD or current input)

Pressure (current input)

Users can choose not to perform pressure or temperature measurement when measuring saturated steam (see "Miscellaneous notes").

The pressure and temperature must be measured in order to measure superheated steam.

Required settings:

1. Flow transmitter: enter pulse value or scale current input range
2. Temperature input: select RTD type and temperature range or scale the temperature range
3. Pressure input: Select the type of pressure measuring cell (gauge or absolute pressure sensor) and scale the measuring range. If gauge pressure is selected, check the value for the atmospheric pressure and change it if necessary.

Display variables:

Mass flow, power (heat flow), volume flow, temperature, pressure, enthalpy, density.

Meters: mass, energy, volume, deficit counter, (optional tariff counter, → 31, → 35).

Miscellaneous notes:

Wet steam alarm

You can configure how the device reacts when a wet steam alarm occurs. A wet steam alarm is triggered if the measured temperature reaches or drops below the condensate temperature (saturated steam temperature) calculated on the basis of the pressure. The wet steam alarm indicates that increased steam condensation can be expected. In the event of a wet steam alarm, the saturated steam condition is determined on the basis of the measured pressure and the calculated quantities of steam are totalized by either the "normal" counter, the wet steam counter (tariff counter1) or the deficit counter. For details, see the "Fault mode" section, → 🗎 45.

Saturated steam measurements

You do not require the pressure or temperature sensor to measure the saturated steam. The missing variable (P or T) is determined using the saturated steam curve stored in the system. However, for reasons of safety and to ensure maximum accuracy, it is advisable to measure the flow, pressure and temperature for every steam application. This is the only way to monitor the steam condition closely and ensure a "wet steam alarm" is issued when the condensate temperature of the steam is reached. In addition, this reliably monitors whether pressure and temperature measurement return implausible values and whether the sensors are not operating correctly. Any inaccuracies in the temperature measurement (e.g. caused by installation errors) are easily detected and corrected.

Example: During ongoing operation, the measured temperature is below the saturated steam temperature which would mean that pure water is flowing through the steam pipes. By entering an offset value, the temperature measurement can be adjusted to a value slightly above (approx. 1-2 °C (1.8-3.6 °F)) the saturated steam temperature. This ensures that steam measurement works correctly and that a wet steam alarm is only issued when real measurement errors or process errors occur.

Energy calculation:

The heat content of steam - also known as the enthalpy - is calculated with reference to 0 °C (32 °F). However, the reference temperature for calculating the enthalpy can be changed from 0 °C (32 °F) to another value.

Example: You want to calculate the energy needed to generate steam (in a steam boiler). Here, the reference value for calculating the energy is not 0 °C (32 °F), but the feedwater temperature, e.g. 100 °C (212 °F). Alternatively you can also calculate the energy consumption in a heat exchanger by setting the average condensate temperature as the reference temperature.

The reference temperature can be set in the Expert/Application/Feedwater Temperature menu.

Calculation

$E = q * \rho(T, p) * [h_D(T, p)]$

E	Quantity of heat
q	Operating volume
ρ	Density
T	Temperature
p	Pressure
h_D	Enthalpy of steam

8.4.2 Steam heat differential

Calculation of the quantity of heat given off when the steam condenses in a heat exchanger.

Alternatively, also calculation of the quantity of heat (energy) which is used to generate steam.

The quantity of heat can be calculated in a variety of ways with the RS33. Various combinations of input signals and mounting locations can be selected for this purpose.

The various calculation methods can be found in the Setup:

Menu Setup → Advanced setup → Application → Op. mode steam

Heat differential/p

The energy is calculated from the difference between enthalpy (steam) and enthalpy (condensate temperature). The condensate pressure is calculated from the condensate temperature, while the steam temperature is calculated from the steam pressure (saturated steam curve).

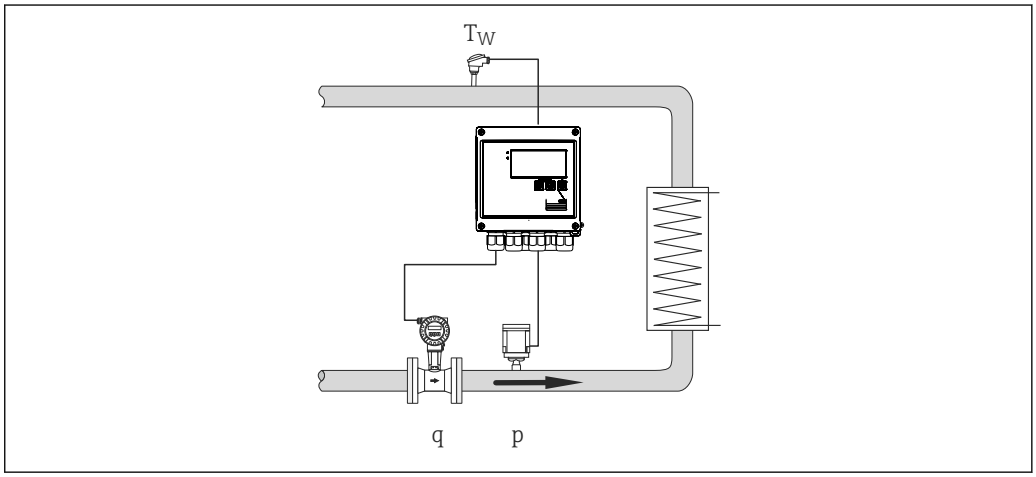

A0022321

Input signals:

Flow, Qv (pulse input or current input)

Condensate temperature (RTD or current input)

Steam pressure (current input)

Heat differential/T

The energy is calculated from the difference between enthalpy (steam) and enthalpy (condensate temperature). The condensate pressure is calculated from the condensate temperature, while the steam pressure is calculated from the steam temperature (saturated steam curve).

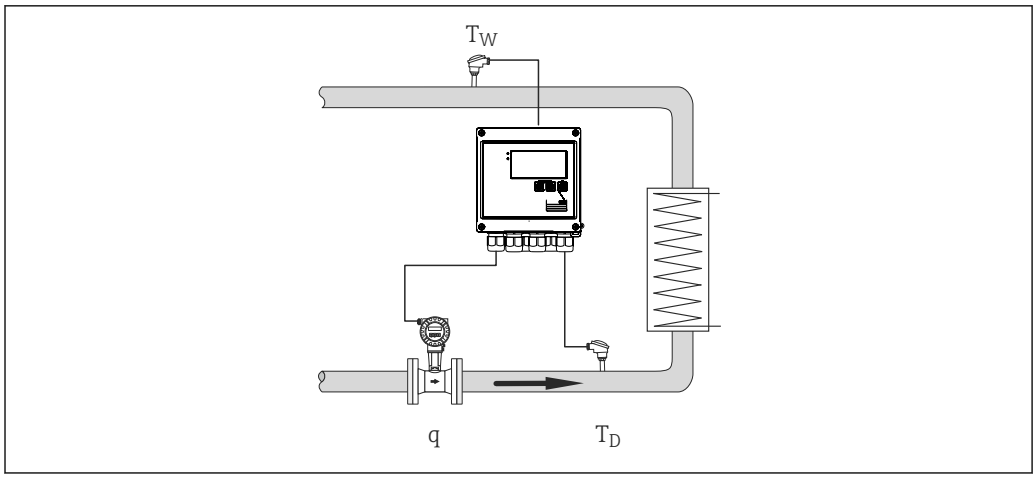

A0022322

Input signals:

Flow, Qv (pulse input or current input)

Condensate temperature (RTD or current input)

Steam temperature (RTD or current input)

Heat differential/p+T

The energy is calculated from the difference between enthalpy (steam) and enthalpy (condensate temperature). It is presumed that the pressure in the condensate corresponds to the pressure in the steam. The condensate pressure is calculated from the condensate temperature, while the steam pressure is calculated from the steam temperature (saturated steam curve).

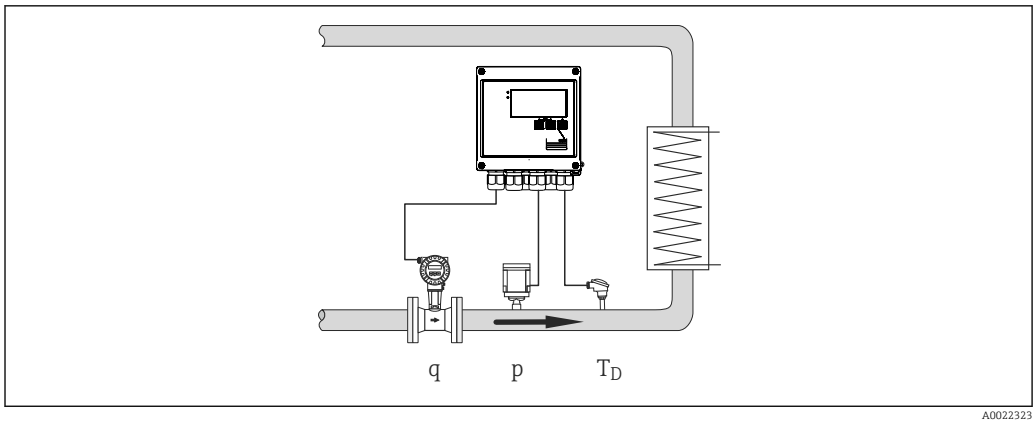

A0022323

Input signals:

Flow, Qv (pulse input or current input)

Steam temperature (RTD or current input)

Steam pressure (current input)

Display variables for all 3 calculation methods:

Power (heat flow), mass flow, volume flow, temperature, pressure, enthalpy, density.

Totalizer: mass, energy, volume, deficit counter

8.4.3 Tariff counter for steam mass and energy flow (option)

This is used for calculating the steam mass flow and the heat quantity it contains. The mass or energy are calculated on different counters depending on specific events. For example, the quantity of steam can be recorded separately and invoiced differently depending on the time of day or the level of consumption.

Similarly bidirectional flow and energy can be recorded on the tariff counters.

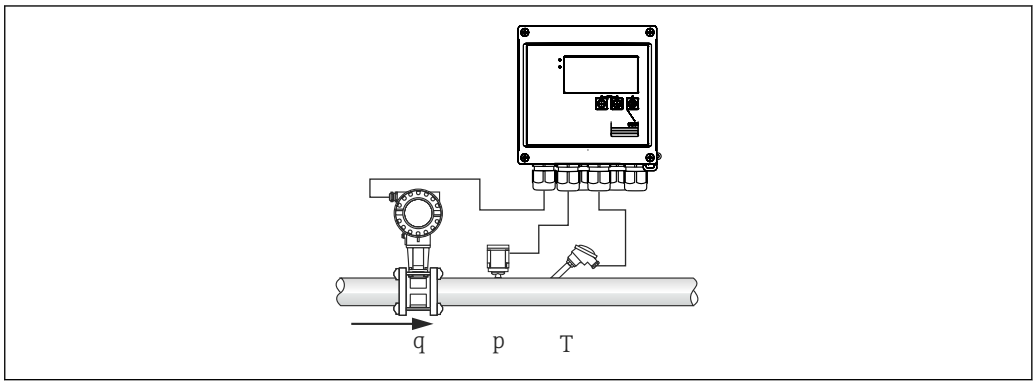

26 Using the tariff counter for steam mass and energy flow (option)

Input signals:

Flow, Qv (pulse input or current input)

Pressure (current input)

Temperature (RTD or current input)

Users can choose not to perform pressure or temperature measurement when measuring saturated steam (see "Miscellaneous notes").

Required settings:

1. Flow transmitter: enter pulse value or scale current input range
2. Temperature input: select RTD type and temperature range or scale the temperature range
3. Pressure input: Select the type of pressure measuring cell (gauge or absolute pressure sensor) and scale the measuring range. If gauge pressure is selected, check the value for the atmospheric pressure and change it if necessary.
4. Select the tariff model and make the tariff settings. Set under Menu **Setup → Application → Tariff**

Display variables:

Power, volume flow, temperature, enthalpy difference, density.

Meters: mass, energy, volume, energy deficit counter, tariff counter.

Miscellaneous notes

- For information on the wet steam alarm and saturated steam measurements, → 27.
- The tariff counter can be used to determine the quantity of steam during a wet steam alarm ("Wet steam" tariff model).

To determine the amounts in bidirectional mode, the tariff counters are activated via the digital inputs or a limit value (e.g. mass flow 0 kg/h).

Calculation

$E = q * \rho(T, p) * [h_D(T, p)]$

E	Quantity of heat
q	Operating volume
ρ	Density
T	Temperature
p	Pressure
h_D	Enthalpy of steam

8.5 Configuring the basic parameters/general device functions

- Inputs, → 32
- Outputs, → 33
- Limit values, → 34
- Display/units, → 35
- Data logging, → 36
- Access protection/locking, → 38
- Communication/fieldbus systems, → 39

8.5.1 Inputs

Flow pulse transmitter

The pulse input can process different current and voltage pulses. The software can switch to different frequency ranges:
- Pulses and frequencies up to 12.5 kHz
- Pulses and frequencies up to 25 Hz (for bounce contacts, max. bounce time: 5 ms)

The input for voltage pulses and contact sensors is divided into different types according to EN 1434 and provides a supply for switching contacts.

Pulse value and K-factor

For all signal types, the pulse value of the flow transmitter has to be entered.

The calculation of the current value for the volume flow is floating; therefore, it decreases continuously with slow pulses. After 100 seconds or if the value is less than the low flow cut off, the flow value becomes 0.

The pulse value of flow transmitters is defined differently depending on the transmitter type. As a result, different units can be selected for the pulse value at the device.

- Pulse/volume unit (e.g. pulses/liter), also referred to as the K-factor (e.g. Prowirl)
- Volume unit/pulse (e.g. liters/pulse, Promag, Prosonic)

Flow current signal

For flow transmitters with a current signal output, the flow measuring range is scaled in the Advanced setup .

The parameterization of flow measurements based on the differential-pressure principle (DP, e.g. "orifice plate") is described in → 46.

Adjustment/calibration of the current input

To adjust the current inputs, a two-point calibration can be carried out in the **Expert** menu, for example to correct the long-term drift of the analog input.

Example: flow signal 4 mA (0 m^3/h), but the device displays 4.01 mA (0.2 m^3/h). If you enter the set point 0 m^3/h, actual value: 0.2 m^3/h the device "learns" a new 4 mA value. The set point must always be within the measuring range.

Low flow cut off

Volume flows below the configured low flow cut off value are evaluated as zero (not measured on the counter). This is used to suppress measured values, for example at the lower limit of the measuring range.

For the pulse input, the minimum permitted frequency can be determined from the low flow cut off. Example: low flow cutoff 3.6 m^3/h (1 l/s), pulse value of the transmitter: 0.1 l.

1/0.1 = 10 Hz. This means that after 10 s the value "0" is displayed for volume flow and power.

For analog signals, two variants of low flow cut off exist:
- Positive flow measuring range, e.g. 0 to 100 m^3/h: Values below the low flow cut off value are treated as zero.
- Negative lower range limit (bidirectional measurement), e.g. −50 to 50 m^3/h: Values around the zero point (+/- low flow cut off value) are evaluated as zero.

Temperature inputs

To measure the temperature, RTD sensors can be connected directly or via transmitter (4 to 20 mA). For direct connection, Pt100/500/1000-type sensors can be used. For Pt100 sensors, different measuring ranges are available to ensure the highest accuracy for both small and large temperature differences:

Menu **Setup** → **Advanced setup** → **Inputs** → **Temperature** → **Range**.

The measuring range can be scaled individually if a current signal is used:

Menu **Setup** → **Advanced setup** → **Inputs** → **Temperature** → **Range start** and **Meas. range end**.

Digital inputs

Two digital inputs are available: Depending on the device's options, the following functions can be controlled via the digital inputs:

Digital input 1	Digital input 2
Activate tariff counter 1 Time synchronization Lock the device	Activate tariff counter 2 Time synchronization Lock the device

8.5.2 Outputs

Universal output (active current and pulse output)

The universal output can be used either as a current output to display an instantaneous value (e.g. power, volume flow) or as an active pulse output to display count values (e.g. volume).

Open collector outputs

The two open collector outputs can be used as a pulse output to output counter values or as a status output to output alarms (e. g. instrument error, limit value violation).

Relay

The two relays can be switched in case of fault messages or a limit value violation.

Relay 1 or 2 can be selected under **Setup** → **Advanced setup** → **System** → **Fault switching**.

Limit values are assigned under **Setup** → **Advanced setup** → **Application** → **Limits**. Possible settings for limit values are described in the "Limit values" section.

8.5.3 Limit values

Events and limit values can be defined for monitoring the process and the device. Off-limit conditions are entered in the event log and the data archive. You can also assign different limit values (alarms) to one relay.

The following operating modes are available for the limit function:

OFF

No action is triggered. The assigned output is always in the normal operating state.

Lower set point (SP lower)

The limit value is active if the configured value is undershot. The limit value is disabled if the value, including hysteresis, exceeds the limit value.

Example: Limit value 100 °C (212 °F), hysteresis 1 °C (1.8 °F) → Limit value on = 100 °C (212 °F), Limit value off = 101 °C (213.8 °F)).

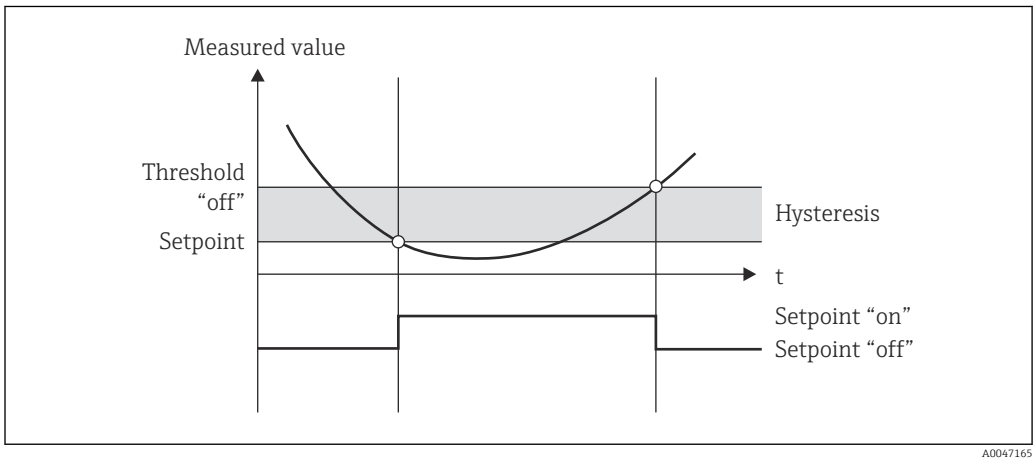

27 "SP lower" operating mode

Upper set point (SP upper)

The limit value is active if the value exceeds the configured value. The limit value is switched off if the limit value, including hysteresis, is undershot.

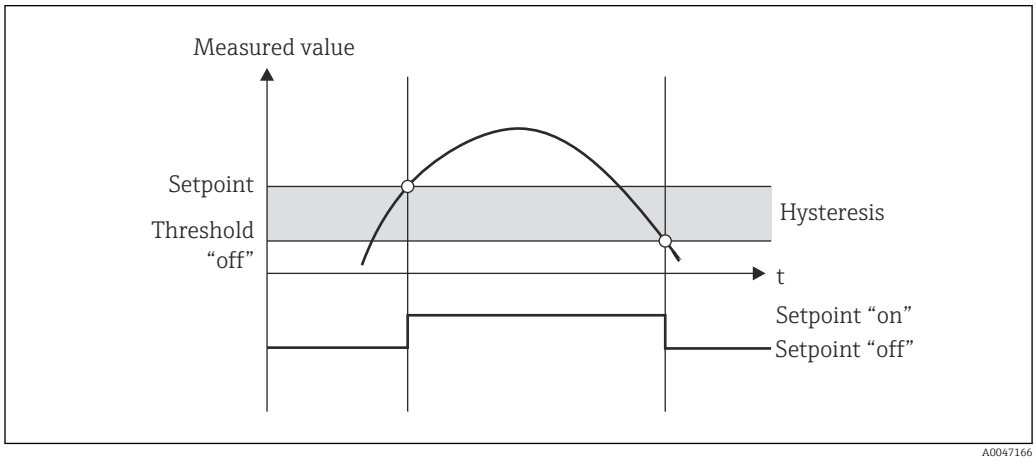

28 "SP upper" operating mode

Counters (day/month/year/billing date counter)

The limit value alarm is triggered if the value exceeds the configured counter value. At the end of the analysis period (e.g. 1 day for the daily counter) or when the counter reading drops below the limit value (e.g. in bidirectional operation), the limit value alarm is deactivated.

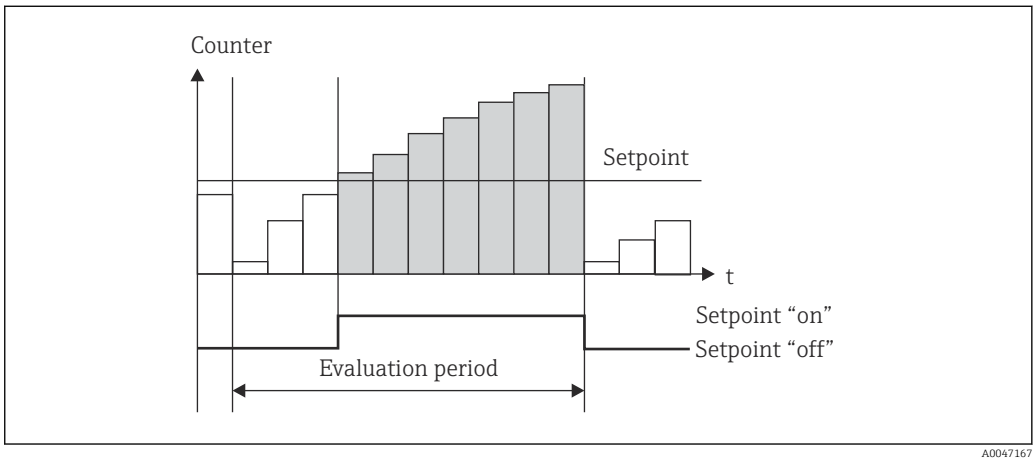

29 *Limit value for counters*

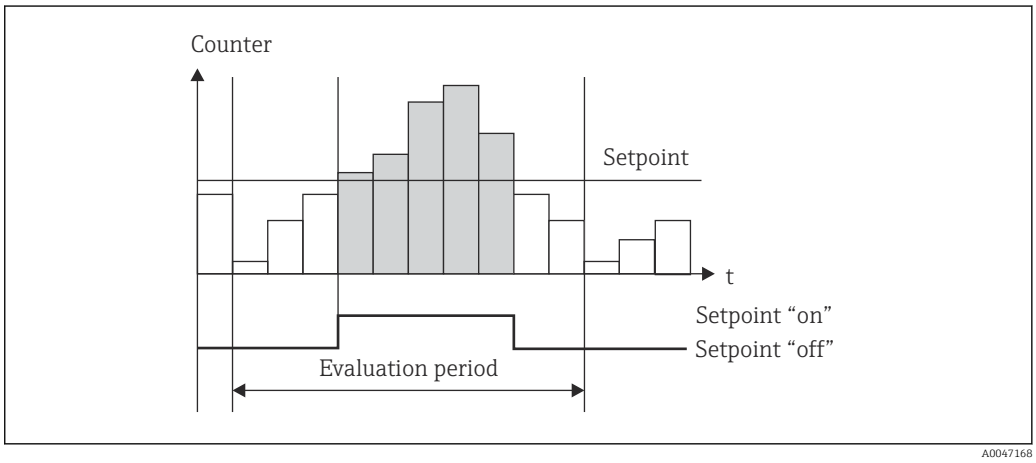

30 *Limit value for counters*

8.5.4 Display settings and units

Display settings

In the **Setup** → **Advanced setup** → **Application** → **Display groups** menu, select which process values are shown on the display. For this purpose, six display groups are available. A group can be assigned up to three values. For a three-line display, the values are displayed in a smaller font size. A user-defined name can be assigned to each group (max. 10 characters). This name is displayed in the header. When the device is delivered, the display groups are preconfigured according to the following table:

Group	Value 1	Value 2	Value 3
1	Power	Energy	Free
2	Mass flow	Temperature	Pressure
3	Pulse value Q	Free	Free
4	Free	Free	Free

Group	Value 1	Value 2	Value 3
5	Free	Free	Free
6	Actual date	Actual time	Free

Display mode

The display mode is selected in the **Display/Operation** menu. You configure the brightness, contrast and the switching mode of the display, i.e. whether switching between the display groups takes place automatically or by pressing a button. In this menu, you can also call up the current values for data recording (interval, day, month and billing date counter) under "stored values". (For details → 🗎 36 see "Data logging")

Hold function – "freezing" the display

The entire measured value acquisition can be "frozen" using an operating option, i.e. the input variables remain at the last measured value and the counter readings are not incremented any higher. The measured values during Hold mode are ignored for data logging. The hold function is enabled/disabled in the **Diagnostics** menu or stopped automatically if no button is pressed for 5 minutes.

No. of Sums/counter overflow

Counters are limited to max. 8 digits before the decimal point (for counters that require signs, to 7 characters). If the counter reading exceeds this value (overflows), it is reset to zero. The number of overflows for each counter is recorded on overflow counters. A counter overflow is shown on the display with the "^" icon. The number of overflows can be called up in the **Display/operation** → **Stored values** menu.

Units

The units for scaling and displaying the process variables are configured in the respective submenus (e.g. the unit for displaying the temperature is configured under **Inputs/ Temperature**).

To make device setting easier, the unit system is selected at the beginning of device commissioning.

- EU: SI units
- USA: imperial units

Selecting the unit system sets the units in the individual submenus to a specific default value, e.g. SI: m^3/h, °C, kWh.

If a unit is converted afterwards, no automatic conversion of the associated (scaled) value is carried out.

For information on the conversion of units, see the appendix .

8.5.5 Data logging

The device stores relevant measured values and counter data at defined times. The averages for volume flow, power, temperature and pressure are calculated and stored in an adjustable interval (1 min – 12 h). The average values for volume flow, power, temperature and pressure are calculated daily, monthly and annually. In addition, the min/max values are determined and stored together with the counter values. In addition, two user-defined billing dates can be used to define a time frame for measuring energy, e.g. for semiannual billing.

Current day, monthly and billing date counters can be called up in the **Display/operation** → **Stored values** menu. In addition, all counters can be shown as a display value (can be allocated to a display group).

The entire data archive, i.e. all stored values, can be read out using the "Field Data Manager Software" only.

Specifically, the following data are stored in the device:

Analysis	Calculation
Interval	Calculating and storing the average for: ▪ Temperature ▪ Pressure ▪ Mass flow ▪ Power
Day	Calculation of min, max and average as well as stored counters. The min and max value are calculated from the instantaneous min/max values. The average is calculated from the averages of the interval evaluation. Min, max and average values are determined for: ▪ Mass flow ▪ Power ▪ Temperature ▪ Pressure Counters are determined for: ▪ Operating volume ▪ Heat (energy) ▪ Tariff 1 ▪ Tariff 2 ▪ Deficit counter For counters, the cumulative counter and the totalizer are stored. For min and max, the time is also stored.
Month	Similar to day, but with average calculation from the daily averages.
Year	Similar to day, but with average calculation from the monthly averages.
Billing date	The following counters are determined: ▪ Operating volume ▪ Heat (energy) ▪ Tariff 1 ▪ Tariff 2 ▪ Deficit counter The analysis always takes place from billing date to billing date.

General notes for data logging

The time of data logging (start time of the logging intervals) can be configured and synchronized via the time of day.

The current analyses (min/max/average, counter) can be reset to zero individually or completely via setup. The archived values (completed analyses) can no longer be changed. To delete them, the entire measured value memory must be cleared.

Storage capacity

The device should be read out regularly using the "Field Data Manager Software" to ensure seamless data logging. Depending on the storage depth, the interval, daily, monthly and annual counters are overwritten after a certain time, see the table below.

Analysis	No. of analyses
Interval	Approx. 875
Day	260 days
Month/year/billing date	17 years
Events	At least 1600 (depending on the length of the event text)

8.5.6 Access protection

To prevent tampering, the device can be protected using a hardware switch in the device , an operating code, lead seal and/or locking via a digital input.

Protection by code

The entire local operation can be protected by a 4-digit operating code (default value is 0000, i.e. no protection). After 600 s without operation, the device is locked again automatically.

Lead sealing on the device

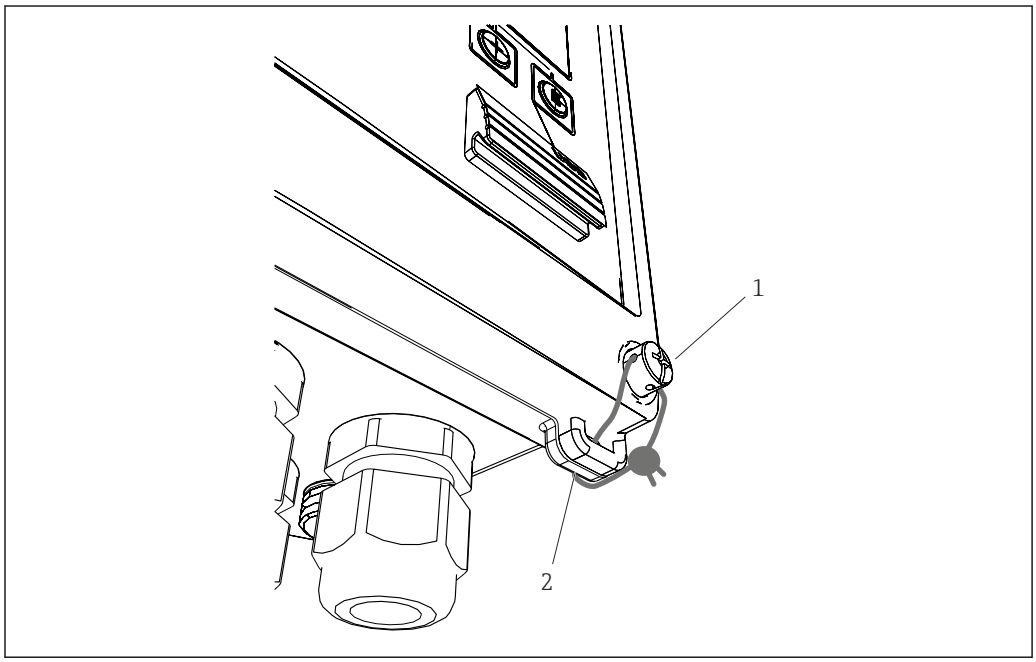

31 Lead sealing of the device

1 Lead sealing screw
2 Housing eyelet

For lead sealing of the device, a lead sealing screw (item 1) and an eyelet (item 2) are available on the device.

Complete locking

If you want to prevent any and all access to the device, the entire device can be locked by applying a signal at the digital input. The data can still be read out via an interface.

8.5.7 Logbooks

Changes to the setup are recorded in entries in the event logbook.

Event logbook

The event logbook stores events such as alarms, limit value violations, setup changes, with the date and time specified. The memory holds at least 1600 messages. Depending on the text length, however, more messages may be stored. If the memory is full, the oldest messages are overwritten. The logbook can be read out using the Field Data Manager software or directly on the device. To exit the logbook quickly, press the +/- keys simultaneously.

8.5.8 Communication/fieldbus systems

General information

The device has (optional) fieldbus interfaces for reading out all process values. Values can be written to the device only as part of configuration of the device (via FieldCare operating software and USB or Ethernet interface). Process values such as flow cannot be transferred to the device via the bus interfaces.

Depending on the bus system, alarms and faults occurring during data transmission are displayed (e.g. status byte).

The process values are transmitted in the same units that are used to display the values on the device. Only for the M-Bus are units converted, if a unit that is not defined in the bus protocol is used for display.

Only the counter readings of the most recently completed storage period (day, month, year, billing date) can be read out of the memory.

For large counter readings, the decimal points are truncated (e.g. 1234567.1234 → 1234567 or 234567.1234 → 234567.1).

The device can be read out via the following interfaces:
- M-Bus
- Modbus RTU
- Ethernet/Modbus TCP

M-Bus

The M-Bus interface is configured in the **Setup** → **Advanced setup** → **Application** → **M-Bus** menu.

Menu item	Parameter	Description
Baud rate	**300**/2400/9600	Transmission rate
Device address	1-250	Primary address
ID number	00000000	The identification number is part of the secondary address (see below)
Manufacturer	EAH	EAH (stands for Endress And Hauser), cannot be changed
Version	01	Cannot be changed
Medium	0E	0E (=Bus/System), cannot be changed
Number	0-30	Number of values to be transferred
Value	Volume flow, T warm, etc.	Selection of values to be transferred.

Data format:
- No automatic baud rate detection
- 8 data bits, EVEN parity (not selectable)

Timeout:

The device waits 11 bit times before answering after having received a request.

Operating mode:

Generally, Mode 1 is used, i.e. LSB is transferred first.

Control characters:
- Start character: 10h (short block) or 68h (long block)
- End character: 16h

Primary address

0	New Device (default)
1 to 250	Freely assignable
251 to 252	Reserved (must not be configured)
253	Addressing via secondary addressing
254	Broadcast address, all respond (only for point-to-point)
255	Broadcast address, none responds

Secondary addressing

The identification number, manufacturer ID, version and medium together make up the secondary address. If a device (slave) is addressed by the master via this address, its secondary address is sent with the primary address 253. The device (slave) whose secondary address matches the sent secondary address responds with E5h and is now connected to the master via primary address 253. Further responses from the device (slave) are sent via address 253. A RESET command or the selection of a different bus device (slave) causes the device (slave) to be deselected. This breaks the connection to the master.

The identification number (for secondary addressing) is a unique, 8-digit number within the device that is factory assigned and is generated from the CPU number. This number can be modified on the unit, though not via M-BUS.

The identification number can be configured in the setup function.

The manufacturer ID, version and medium can be displayed in the setup only; they cannot be changed.

Addressing is also possible using wildcards. For the identification number, this is "Fhex" and for the manufacturer ID, version and medium, it is "FFhex".

For the M-Bus, the measured value is transmitted along with the unit (as per EN 1434-3). Units that are not supported by M-Bus are transmitted as an SI unit.

Modbus RTU/(TCP/IP)

Detailed information for Modbus register assignment: www.endress.com

The device can be connected to a Modbus system via RS485 or Ethernet interface. The general settings for the Ethernet connection are configured in the **Setup** → **Advanced setup** → **System** → **Ethernet** menu, → 42. Modbus communication is configured in the **Setup** → **Advanced setup** → **System** → **Modbus** menu.

Menu item	RTU	Ethernet
Device address:	**1** to 247	IP address manual or automatic
Baud rate:	2400/4800/9600/**19200**/38400	-
Parity:	**Even**/Odd/None	-
Port	-	502
Reg	Register	Register
Value	Value to be transmitted	Value to be transmitted

Transfer of values

The actual Modbus TCP protocol is located between layer 5 to 6 in the ISO/OSI model.

To transmit a value, 3 registers of 2 bytes each are used (2 bytes status + 4-byte float). In the setup, you can configure which register is to be written with which value. The most important/most common values are already preconfigured.

Register 000	Status of first measured value (16-bit integer, high byte first)
Register 001 to 002	First measured value (32-bit float, high byte first)

Validity and limit value information are encoded in the status byte.

16		6	5	4	3	2	1	
	Not used			0	0	0	0	ok
				0	0	0	1	Open circuit
				0	0	1	0	Over range
				0	0	1	1	Under range
				0	1	0	0	Invalid measured value
				0	1	1	0	Replacement value
				0	1	1	1	Sensor error
			1					Lower limit value violated
		1						Upper limit value violated
1								Counter overflow

During the request from the master, the desired start register and the number of registers to be read are sent to the device. Because a measured value always requires three registers, the start register and the number must be divisible by 3.

From the master to the device:

ga fk r1 r0 a1 a0 c1 c2

ga	Slave address (1..247)
fk	Function, always 03
r1 r0	Start register (high byte first)
a1 a0	Number of registers (high byte first)
c0 c1	CRC checksum (low byte first)

Response from device in event of successful request:

ga fk az s1 s0 w3 w2 w1 w0 s1 s0 w3 w2 w1 w0 . . . . . s1 s0 w3 w2 w1 w0 c1 c0

ga	Device address
fk	Function, always 03
az	Number of bytes of all subsequent measured values
s1 s0	Status of first measured value (16-bit integer, high byte first)
w3 w2 w1 w0	First measured value in 32-bit float format, high byte first
s1 s0	Status of second measured value (16-bit integer, high byte first)
w3 w2 w1 w0	Second measured value (32-bit float, high byte first)
s1 s0	Status of last measured value (16-bit integer, high byte first)
w3 w2 w1 w0	Last measured value (32-bit float, high byte first)
c0 c1	CRC checksum, 16-bit (low byte first)

Response from device in event of unsuccessful request:

ga fk fc c0 c1

ga	Slave address (1..247)
fk	Requested function + 80hex

fc	Error code
c0 c1	CRC checksum, 16-bit (low byte first)

Error code:

01 : Function unknown
02 : Start register invalid
03 : Number of registers to be read invalid

In the event of checksum or parity errors in the request from the master, the device does not respond.

For large counter readings, the decimal points are truncated.

For additional information on the Modbus, see Operating Instructions BA01029K.

Process messages via Modbus:

Protocol address (base 0)	PLC address (base 1)	Function	Data type	Description
5300	5301	Number of active process messages	UINT16	This register provides the number of active process messages: Modbus functions 03 (Read Holding Register), 04 (Read Input Register). e.g. 0x0003
5301	5302	Read out the error code of the process message currently displayed	UINT16	The value has the following structure. Bit 15: "F" Bit 14: "C" Bit 13: "M" Bit 12: "S" Bit 0-11 Error code, Modbus functions 03 (Read Holding Register), 04 (Read Input Register). e.g. "F903" -> 0x8387 -> binary 1000 0011 1000 0111
5302	5303	Acknowledge process messages	UINT16	1: Acknowledge process message currently displayed 2: Acknowledge all process messages, Modbus function 06 (Write Register)

The byte sequence must follow the setting.

Ethernet/web server (TCP/IP)

Setup → Advanced setup → System → Ethernet

The IP address can be entered manually (fixed IP address) or assigned automatically using DHCP.

The port for the data communication is set by default to 8000. The port can be changed in the **Expert** menu.

The following functions are implemented:
- Data communication to PC software (Field Data Manager Software, FieldCare, OPC server)
- Web server
- Modbus TCP → 40

Up to four connections can be opened simultaneously, e.g. Field Data Manager Software, Modbus TCP and two web servers, with only one data connection via Port 8000 being possible at any one time.

Once the maximum number of four connections has been reached, new connection attempts are blocked until an existing connection has been terminated.

Web server

If the device is connected via Ethernet, it is possible to export the display values via the Internet using a web server.

The web server port is preset to 80. The port can be changed in the **Expert** → **System** → **Ethernet** menu.

If the network is protected by a firewall, the port may need to be activated.

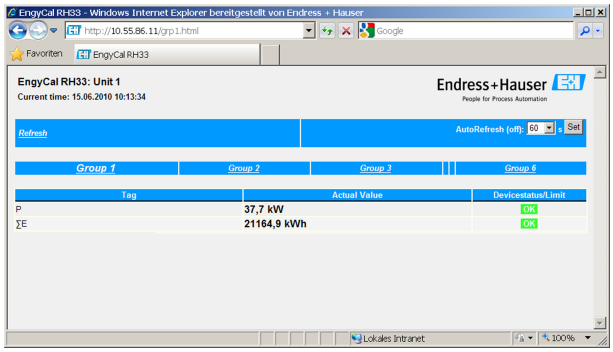

32 *Display values shown in the web browser (using the example of the EngyCal RH33)*

As on the display of the device, you can also switch between the display groups in the web server. The measured values are updated automatically (directly via "link": off/5s/15s/30s/60s). In addition to the measured values, status and limit value flags are displayed.

Data can be exported via the web server in HTML or XML format.

When using an Internet browser, it is sufficient to enter the address http://<IP address> to display the HTML view in the browser. In addition, two versions of the XML format are available. These versions can be integrated into additional systems as required. The two XML versions contain all the measured values which are assigned to any group.

The decimal separator is always displayed as a period in the XML file. All times are given in UTC. The time difference in minutes is noted in the following entry.

Version 1:

The XML file is available in ISO-8859-1 (Latin-1) encoding at the address http://<IP address>/index.xml (alternatively: http://<IP address>/xml). However, this encoding cannot display some special characters such as the sum sign. Texts, such as digital status, are not transmitted.

Version 2:

A UTF-8 encoded XML file can be retrieved at the address http://<IP address>/main.xml All the measured values and the special characters can be found in this file.

The structure of the channel values for the XML file is explained as follows:

```
<device      id="ID0104" tag="Flow" type="INTRN">
             <v1>12.38</v1>
             <u1>m3/h</u1>
             <vstslv1>2</vstslv1>
             <hlsts1>ErS</hlsts1>
             <vtime>20120105-004158</vtime>
             <man>Endress+Hauser</man>
             <param />
</device>
```

Tag	Description
tag	Channel identifier
v1	Measured value of channel as a decimal value
u1	Unit of measured value
vstslv1	Status of the measured value 0 = OK, 1 = warning, 2 = error
hlsts1	Error description OK, OC = cable open circuit, Inv = invalid, ErV = error value, OR = over range, UR = under range, ErS = error sensor
vtime	Date and time
MAN	Manufacturer

Web server settings

Menu **Setup** → **Advanced setup** → **System** → **Ethernet** → **Web server** → **Yes** or menu **Expert** → **System** → **Ethernet** → **Web server** → **Yes**

If default port 80 is not available in the network, you can change the port in the **Expert** menu.

Enter the address for retrieval in the Web browser: http://<IP address>

The following web browsers are supported:
- MS Internet Explorer 6 and higher
- Mozilla Firefox 2.0 and higher
- Opera 9.x and higher

The operating language for the web server is English. No other languages are offered.

The device makes the data available in HTML or XML format (for the Fieldgate Viewer).

No provision is made for authentication via ID/password.

8.6 Optional device settings/special functions

- **Expert** menu (fine-tuning of the device) → 📄 44
- Fault mode → 📄 45
- Tariff counter → 📄 45
- Temperature sensor matching (CVD) → 📄 46
- DP flow calculation (e.g. orifice plate) → 📄 46

8.6.1 "Expert" menu (fine-tuning of the device)

The Expert menu offers access to functions for fine-tuning to adapt the device optimally to the application conditions. The user interface corresponds to the **Setup/Advanced settings** menu plus a few special tuning and service functions, such as adjusting the current inputs, resetting the device to the factory default state.

ℹ Access to the Expert menu requires an access code. The factory default code is "0000".

Adjusting the current inputs

As part of a "2-point correction", the characteristic of the sensor can be adjusted, e.g. to correct the long-term drift of the current input (current output of a sensor) or to align the input signal with display devices or sensors. For this purpose, the actual value and a correction value (set point) are configured for the beginning and end of the measurement

range. By default, the offset is disabled, i.e. the set point and actual value are the same for each.

The set point must always be within the measuring range.

8.6.2 Fault mode

In the Expert menu, you can configure the fault mode for each input individually.

- In the position "Namur NE 43", the signal range limits for a current input are defined (the current value at which the "Open circuit" or "Sensor error" alarm is triggered). The NAMUR guideline defines error limits for the sensors. For details, refer to table.
- The "On error" field defines whether the calculation is stopped (invalid) or whether a replacement value (error value) is to be used to calculate the energy quantity during the alarm. The deficit counter is used to record the deficit. For more information, refer to the table.

The fault mode affects the display, counters and outputs as follows.

	Measuring range				
Display	- - - - -	- - - - -	Measured value	Measured value	Measured value
Status	F	F			
Diagnostic message	Open circuit	Sensor error	Under range	Over range	
0 to 20 mA		≥ 22 mA			0 to 22 mA
4 to 20 mA as per Namur NE 43	≤ 2 mA	≥ 21 mA or > 2 mA to ≤ 3.6 mA	> 3.6 mA to ≤ 3.8 mA	≥ 20.5 mA to < 21 mA	> 3.8 mA to < 20.5 mA
4 to 20 mA without Namur	≤ 2 mA	≥ 22 mA			> 2 mA to < 22 mA
RTD	T outside measuring range				
Effect	Configurable in setup: ▪ No further calculation and failure current at output ▪ Further calculation with replacement value, normal counter and tariff counter do not move, deficit counter runs, calculated value at output. Value output via buses obtains status byte "invalid value" The "fault" relay/OC switches.		Normal calibration. The "fault" relay/OC is not switched.		

8.6.3 Tariff counter

The tariff function serves to measure the energy on separate counters (registers) when a certain event takes place. For example, the energy can be counted on two separate tariff counters at a power above and below 100 kW.

The function of the standard energy counter is independent of the tariff counters, i.e. it continues running.

The two tariff counters can be activated independently of each other by the following events (tariff models):

Tariff model	Necessary inputs
Power (heat flow)	Upper or lower set point (min/max)
Volume flow	
Mass flow	
Temperature	
Pressure	

Tariff model	Necessary inputs
Energy	▪ Limit value ▪ The counter to which the set point pertains: Interval/Day/Month/Year/Billing date
Digital input	In the digital input, assign the "Start tariff" function Tariff 1 can be controlled via digital input 1 only, Tariff 2 via digital input 2.
Time	Time "From" and "To" in the format HH:MM (HH:MM AMPM)
Wet steam	Counter type: Energy or mass

The tariff counter is an energy counter. The unit is identical to the "normal" energy counter.

In the event of an alarm, the tariff counters behave like the standard counters → 45.

If the tariff type is changed, the counter reading is reset to zero! → 45

8.6.4 Temperature calibration (CVD)

The temperature calibration function enables you to store the individual characteristics of temperature sensors in the device. In this way, any desired temperature sensors can be paired electronically, which ensures highly accurate measurement of process temperature, temperature differential and energy.

As part of the temperature sensor calibration (electronic pairing), the Callendar von Dusen coefficients of the general cubic temperature function equation (IEC 751) are replaced by sensor-specific A, B and C coefficients.

To store the curves, select the signal type "Platinum RTD (CVD)" in the **Inputs/ Temperature** menu. The coefficients are entered in the **Inputs/Temperature/ Linearization CVD** menu

Linearizing equations as per Callendar van Dusen

Range −200 °C (−328 °F) to < 0 °C (32 °F) $Rt = R0 * [1 + A * t + B * t^2 + (t - 100) * C * t^3]]$

Range ≥ 0 °C (32 °F) $Rt = R0 * (1 + A * t + B * t^2)$

Operating options	Description/remarks
R0	See equation. Input in ohms. Range: 40.000 to 1 050.000 Ohm
A, B, C	CvD coefficients. Input in Exp format (x,yyE±zz)

8.6.5 DP flow calculation (flow measurement according to the differential pressure method)

General information

The device calculates the flow rate using the differential pressure method in accordance with ISO 5167.

Unlike conventional differential pressure measurement methods, which provide accurate results only under design conditions, the device calculates the coefficients of the flow equation (flow coefficient, velocity of approach factor, expansion number, density etc.) iteratively on a continuous basis. This ensures that the flow is always computed with the greatest of accuracy, even with fluctuating process conditions and completely independently of the design conditions (temperature and pressure in the sizing parameters).

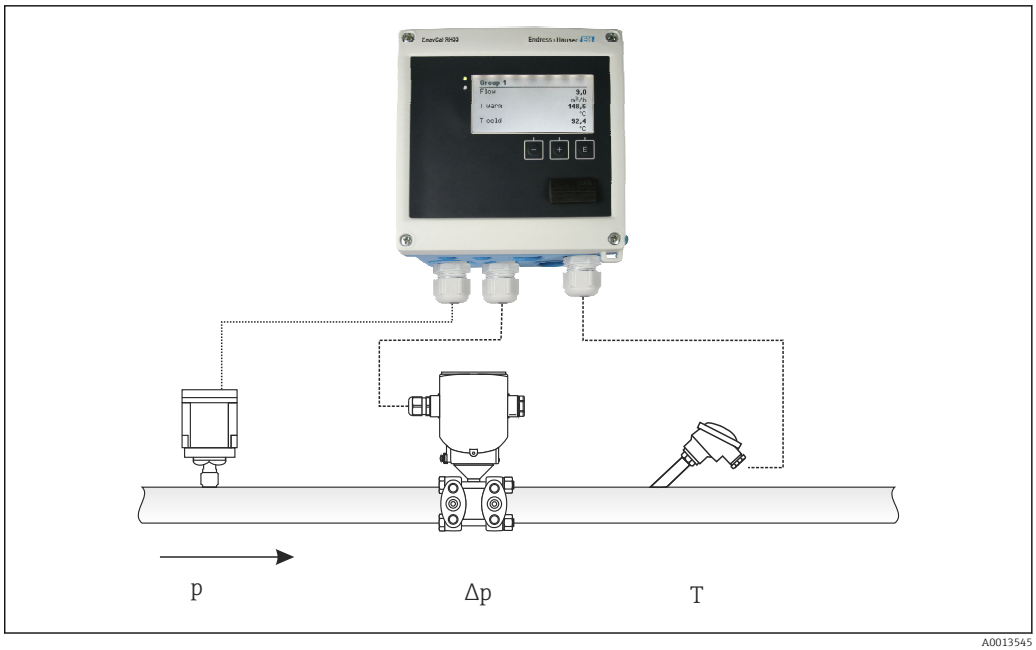

A0013545

33 *DP flow calculation*

General ISO 5167 equation for orifice plates, nozzles, Venturi tube

$$Qm = f \cdot c \cdot \sqrt{\frac{1}{1-\beta^4}} \cdot \varepsilon \cdot d^2 \frac{\pi}{4} \cdot \sqrt{2 \cdot \Delta p \cdot \rho}$$

A0013547

Pitot tube

$$Qm = k \cdot d^2 \frac{\pi}{4} \cdot \sqrt{2 \cdot \Delta p \cdot \rho}$$

A0013548

Gilflo, V-Cone (other DP flowmeters)

$$Qm = Qm(A) \cdot \sqrt{\frac{\rho_B}{\rho_A}}$$

A0013549

Legend

Qm	Mass flow (compensated)
k	Blockage factor
ρ	Density under operating conditions
Δp	Differential pressure
Qm(A)	Mass flow under design conditions
ρ_A	Density under design conditions
ρ_B	Density under operating conditions

Parameter configuration for differential pressure measurement

To configure the DP flow measurement, make the following menu selection: **Flow/Signal** menu: 4 to 20 mA (DP). For additional parameter configuration, the following data

(according to the design sheet or nameplate of the differential pressure measuring device) are required.

- Design and material of the primary element, e.g. orifice plate, nozzle
- Differential pressure measuring range
- Internal diameter of pipe at 20 °C (68 °F)
- Diameter of the primary element (or K-factor for Pitot tubes) at 20 °C (68 °F)
- Density in design parameter (for V-Cone and Gilflo only)

For selecting the characteristic for the flow signal

EngyCal	DP transmitter (output)
Linear characteristic	Characteristic of DP linear transmitter, scaled to mbar or inchH20
Curve square law	Characteristic of DP transmitter square root, scaled to kg/h, t/h, ft^3/h, etc.

Preferably, use the linear characteristic, as this attains higher accuracy for flow calculation in the lower range.

The following values are displayed in the **Diagnostics** menu for the purposes of checking the calculation.
- Flow coefficient c
- Expansion number β
- Differential pressure (DP)

8.7 Data analysis and visualization with the Field Data Manager software (accessories)

FDM is a software application which offers central data administration with visualization for recorded data.

This enables the data of a measuring point to be fully archived, e.g.:
- Measured values
- Diagnostic events
- Protocols

FDM saves the data in an SQL database. The database can be operated locally or in a network (client/server).

The following databases are supported:
- PostgreSQL [1)]
  The supplied free PostgreSQL database can be installed and used.
- Microsoft SQL server [1)]
  Contact your database administrator to set up a login.

Data can be imported from the device via the software's user interface. To do this, use the USB cable available as an accessory or the Ethernet port of the device→ 42.

For details on installing and operating the Field Data Manager software:

See online at: www.produkte.endress.com/ms20

1) The product names are registered trademarks of the individual manufacturers.

9 Diagnostics and troubleshooting

9.1 Instrument diagnostics and troubleshooting

The Diagnostics menu is used for the analysis of the device functions and offers comprehensive assistance during troubleshooting. Proceed as follows to locate the cause of device errors or alarms:

General troubleshooting procedure

1. Open diagnostic list: Lists the 10 most recent diagnostic messages. This can be used to determine which errors are currently present and whether an error has repeatedly occurred.
2. Open the diagnostic measured value display: Check the input signals by viewing the raw values (mA, Hz, Ohm) or the scaled measuring ranges. To verify calculations, call up calculated auxiliary variables if necessary.
3. Most faults can be rectified by performing steps 1 and 2. If the fault persists, follow the troubleshooting instructions for the fault types from Section 9.2 of the Operating Instructions.
4. If this does not rectify the problem, contact the Service Department. For service inquiries, please always have the diagnostic number and the information from the Device information/ENP (program name, serial number etc.) available.

The contact data for your Endress+Hauser representative can be found on the Internet at www.endress.com/worldwide.

9.1.1 Hold function – "freezing" the display values

The hold function freezes the entire measured value acquisition, including the counter readings. As part of troubleshooting, e.g. for rewiring, this function is recommended for suppressing error messages so that the diagnostics and event logbook are not filled with unnecessary entries.

The measured values during Hold mode are ignored for data logging. The hold function is enabled/disabled in the **Diagnostics** menu or stopped automatically if no button is pressed for 5 minutes.

9.1.2 Troubleshooting for M-BUS

If no communication with the EngyCal occurs via the M-Bus:
- Does the device address in the device match the master?
- Are the device and the master using the same baud rate?
- Is there more than one device with the same device address attached to the M-Bus?
- Is the M-Bus connected to the device correctly?

9.1.3 Troubleshooting for Modbus

- Do the device and master have the same baudrate and parity?
- Is the interface correctly wired?
- Does the device address sent by the master match the configured device address of the device?
- Do all the slaves on the Modbus have different device addresses?

9.1.4 Device error/alarm relay

There is a global "alarm relay“. In the setup, either the relay or the open collector can be assigned to this function.

This "alarm relay" switches if "F" type errors occur (F = failure). "M" type errors (M= Maintenance required) do not switch the alarm relay.

For errors of type F, the color of the backlighting of the display additionally switches from white to red.

9.2 Error messages

Fault	Description	Remedy
F041	Open circuit: AI1 (flow), AI2 (temperature), AI3 (pressure). Input current ≤ 2 mA ▪ Incorrect wiring ▪ Full scale value of the measuring range configured incorrectly ▪ Sensor defective	▪ Check the wiring ▪ Enlarge measuring range (change scaling) ▪ Replace sensor
F104	Sensor error Input current > 2 … ≤ 3.6 mA or ≥ 21 mA (or 22 mA for 0 to 20 mA signal) ▪ Incorrect wiring ▪ Full scale value of the measuring range configured incorrectly ▪ Sensor defective Pulse input > 12.5 kHz or > 25 Hz	▪ Check the wiring ▪ Enlarge measuring range (change scaling) ▪ Replace sensor ▪ Select a larger value for pulse value
F201	Device error (operating system error)	Contact the Service Team.
F261	System error (miscellaneous hardware errors)	Contact the Service Team.
F301	Setup defective	Reconfigure the device. If the error recurs, contact service.
F303	Device data defective	Contact the Service Team.
F305	Counters defective	Counter value is reset automatically to 0.
F307	Customer preset value defective	Save configuration parameters.
F309	Invalid date/time (e.g. GoldCap was empty)	Device was switched off too long. The date/time must be set again.
F310	The setup could not be saved	Contact the Service Team.
F311	Device data could not be stored	Contact the Service Team.
F312	Calibration data could not be stored	Contact the Service Team.
F314	Activation code is no longer correct (incorrect serial number/program name).	Enter new code.
F431	Calibration data missing	Contact the Service Team.
F501	Invalid configuration	Check setup.

F900	Input variable(s) outside the calculation limits (see Technical data, → 📄 58)	▪ Check plausibility of the measured input values ▪ Check scaling of device inputs/sensor outputs ▪ Check system/process
F910	Firmware for this device not released.	Install correct firmware.
F914	Density calculation for DP flow calculation is faulty	Check temperature input and entries in the density table.
F915	Viscosity calculation for DP flow calculation is faulty	Check temperature input and entries in the viscosity table.
F916	Flow < 0 ! If the bidirectional flow is controlled via the temperature, the flow must not be negative.	Check process values and settings.
M102	Over range Input current ≥ 20.5 mA to < 21 mA	Enlarge measuring range (change scaling).
M103	Under range Input current > 3.6 mA to ≤ 3.8 mA	Enlarge measuring range (change scaling).
M284	Firmware has been updated	No action required.
M302	Setup has been loaded from backup.	No effect on operation. As a precaution, check and adjust setup settings.
M304	Device data defective. The system continues working with backup data.	No action required.
M306	Counter defective, but system could continue working with backup.	Check the plausibility of the counter reading (compare to the last stored counter reading).
M313	FRAM has been defragmented	No action required.
M315	No IP address could be obtained from the DHCP server!	Check network cable, contact network administrator.
M316	No or incorrect MAC address	Contact the Service Team.
M502	Device is locked! - e.g. during an attempt to update the firmware	Locking via digital channel.
M905	Limit value violation	
M906	Limit value violation end	
M908	Analog/pulse output error	Check process values and scaling of the output, select full scale value or pulse value.

M913	DP flow outside ISO 5167, i.e. the input parameters for the calculations are outside the scope of application of the ISO 5167 standard.	Check entries for model, pipe diameter, throttle diameter. The calculations continue to be carried out, but the measurement accuracy according to ISO 5167 is not guaranteed.

9.3 Diagnostic list

See also error messages, → 50.

The device has a diagnostic list in which the last 10 diagnostic messages (messages with diagnostic numbers from type Fxxx or Mxxx) are stored.

The diagnostic list is designed as a ring memory. When the memory is full, the oldest messages are automatically overwritten without generating a message.

The following information is saved:
- Date/time
- Diagnostic number
- Error text

The diagnostic list is not read out via the PC operating software, but can be displayed via FieldCare.

The following fall under Fxxx or Mxxx:
- Open circuit
- Sensor error
- Invalid measured value

9.4 Output function test

In the Diagnostics/Simulation menu, the user can output certain signals at the outputs (function text).

The simulation is ended automatically if the user has not pressed any buttons for 5 minutes or has switched off the function explicitly.

9.4.1 Relay tests

The user can switch the relay manually.

9.4.2 Simulation of outputs

The user can output certain signals at the outputs (function test).

Analog output

Allows you to output a current value for test purposes. You can configure fixed values:
- 3.6 mA
- 4.0 mA
- 8.0 mA
- 12.0 mA
- 16.0 mA
- 20.0 mA
- 20.5 mA
- 21.0 mA

Pulse outputs (pulse/OC)

Allows you to output pulse packages for test purposes. The following frequencies are possible:
- 0.1 Hz
- 1 Hz
- 5 Hz
- 10 Hz
- 50 Hz
- 100 Hz
- 200 Hz
- 500 Hz

The following simulations are only available for the pulse output:
- 1 kHz
- 5 kHz
- 10 kHz

9.4.3 Status of the outputs

The current status of the relays and open collector outputs can be queried in the "Diagnostics/Outputs" menu (e.g. relay 1: open).

10 Maintenance

No special maintenance work is required for the device.

10.1 Adjustment

To adjust the inputs and outputs, a two-point offset is used. The sensors can be adjusted only in the Expert menu. See "Adjusting the current inputs", .

10.2 Cleaning

10.2.1 Cleaning of surfaces not in contact with the medium

- Recommendation: Use a lint-free cloth that is either dry or slightly dampened using water.
- Do not use any sharp objects or aggressive cleaning agents that corrode the surfaces (displays, housing, for example) and seals.
- Do not use high-pressure steam.
- Observe the degree of protection of the device.

The cleaning agent used must be compatible with the materials of the device configuration. Do not use cleaning agents with concentrated mineral acids, bases or organic solvents.

10.2.2 Cleaning of surfaces in contact with the medium

Note the following for cleaning and sterilization in place (CIP/SIP):
- Use only cleaning agents to which the materials in contact with the medium are sufficiently resistant.
- Observe the permitted maximum medium temperature.

11 Repair

11.1 General information

The device has a modular design and repairs can be carried out by the customer's electrotechnical personnel. For more information on service and spare parts, contact the supplier.

11.1.1 Repair of Ex-certified devices

- Only specialist personnel or the manufacturer may undertake repairs on Ex-certified devices.
- The prevailing standards, national hazardous area regulations, safety instructions and certificates must be observed.
- Only use original spare parts from the manufacturer.
- When ordering spare parts, check the device designation on the nameplate. Parts may only be replaced by identical parts.
- Carry out repairs according to the instructions. On completion of the repair, carry out the routine test specified for the device.
- A certified device may only be converted to another certified device version by the manufacturer only.
- Document all repairs and modifications.

11.2 Spare parts

Product spare parts that are currently available can be found online at:
www.endress.com/onlinetools

11.3 Return

The requirements for safe device return can vary depending on the device type and national legislation.

1. Refer to the web page for information: https://www.endress.com
2. If returning the device, pack the device in such a way that it is reliably protected against impact and external influences. The original packaging provides the best protection.

11.4 Disposal

11.4.1 IT security

Observe the following instructions before disposal:

1. Delete the data
2. Reset the device

11.4.2 Removing the measuring instrument

1. Switch off the device
2. Carry out the mounting and connection steps from the "Installing the measuring instrument" and "Connecting the measuring instrument" sections in reverse order. Observe the safety instructions.

11.4.3 Disposing of the measuring instrument

If required by the Directive 2012/19/EU on waste electrical and electronic equipment (WEEE), the product is marked with the depicted symbol in order to minimize the disposal of WEEE as unsorted municipal waste. Do not dispose of products bearing this marking as unsorted municipal waste. Instead, return them to the manufacturer for disposal under the applicable conditions.

12 Accessories

The accessories currently available for the product can be selected at www.endress.com:

1. Select the product using the filters and search field.
2. Open the product page.
3. Select **Spare parts & Accessories**.

12.1 Device-specific accessories

12.1.1 Accessories enclosed

Accessories	Description
Pipe mounting set	Mounting plate for pipe mounting For dimensions and installation instructions, see the "Installation" section.
DIN rail mounting set	DIN rail adapter for DIN rail mounting For dimensions and installation instructions, see the "Installation" section.
Panel mounting set	Mounting plate for panel mounting For dimensions and installation instructions, see the "Installation" section.

12.1.2 For the sensor

Accessories	Description
Heating jacket	Is used to stabilize the temperature of the fluids in the sensor. Water, water vapor and other non-corrosive liquids are permitted for use as the medium. If using oil as a heating medium, please consult with Endress+Hauser. Heating jackets cannot be used with sensors fitted with a rupture disk. For details, see Operating Instructions BA00099D

12.2 Service-specific accessories

Commubox FXA291

Connects Endress+Hauser field devices with a CDI interface (= Endress+Hauser Common Data Interface) and the USB port of a computer or laptop.

For more information, please refer to: www.endress.com

RXU10-G1

USB cable and FieldCare Device Setup configuration software incl. DTM library

For more information, please refer to: www.endress.com

FieldCare SFE500
FieldCare is a configuration tool for Endress+Hauser and third-party field devices based on DTM technology.
The following communication protocols are supported: HART, WirelessHART, PROFIBUS, FOUNDATION Fieldbus, Modbus, IO-Link, EtherNet/IP, PROFINET and PROFINET APL.

Technical Information TI00028S
www.endress.com/sfe500

12.3 Communication-specific accessories

Field Data Manager (FDM) analysis software MS20, MS21

- Field Data Manager (FDM) is a software which provides central data management and visualization. This enables the continuous, tamper-free archiving of process data, e.g. measured values and diagnostic events. "Live data" from connected devices is available. FDM saves the data in an SQL database.
- Supported databases: PostgreSQL (included in the delivery), Oracle or Microsoft SQL server.
- MS20 single-user license: Installing the software on a computer.
- MS21 multi-user license: Several simultaneous users, dependent on the number of available licenses.

Technical Information TI01022R

www.endress.com/ms20

www.endress.com/ms21

12.4 Online tools

Product information about the entire life cycle of the device is available at:
www.endress.com/onlinetools

12.5 System components

Data Manager of the RSG product family

Data Managers are flexible and powerful systems to organize process values. Up to 20 universal inputs and up to 14 digital inputs for direct connection of sensors, optionally with HART, are available as an option. The measured process values are clearly presented on the display and logged safely, monitored for limit values and analyzed. The values can be forwarded via common communication protocols to higher-level systems and connected to one another via individual plant modules.

For more information, please refer to: www.endress.com

Process indicators from the RIA product family

Easily readable process indicators with various functions: loop-powered indicators for displaying 4-20mA values, display of up to four HART variables, process indicators with control units, limit value monitoring, sensor power supply, and galvanic isolation.

Universal application thanks to international hazardous area approvals, suitable for panel mounting or field installation..

For more information, please refer to: www.endress.com

Surge arrester modules from the HAW product family

Surge arrester modules for DIN rail and field device mounting, for the protection of plants and measuring instruments with power supply and signal/communication lines.

More detailed information: www.endress.com

RN series active barrier

Single- or two-channel active barrier for safe separation of 0/4 to -20 mA standard signal circuits with bidirectional HART transmission. In the signal duplicator option, the input signal is transmitted to two galvanically isolated outputs. The device has one active and one passive current input; the outputs can be operated actively or passively.

For more information, please refer to: www.endress.com

13 Technical data

13.1 Function and system design

Measuring principle

The EngyCal RS33 steam calculator is used to record steam mass and energy flow in systems with saturated or superheated steam. The calculation is based on the process values measured for volume flow, temperature and/or pressure. Depending on the installation position of the measuring instruments, the heat quantity can be determined using different calculation methods. The standard heat quantity calculation can be used as well as a steam heat difference measurement. For steam temperature-difference measurement, the correct installation position of the measuring instruments must be observed.

The measured and calculated values can be output via Ethernet, fieldbuses or as an analog signal. The counters are easy to install and read. Thanks to its proven longterm stability and high-precision measurements, the device helps to optimize processes and control costs within the process. Comprehensive data analysis options in the Field Data Manager software MS20 (see accessories) identify potential areas for cost reduction.

Measuring system

Design of different applications such as heat quantity or heat differential with the steam calculator

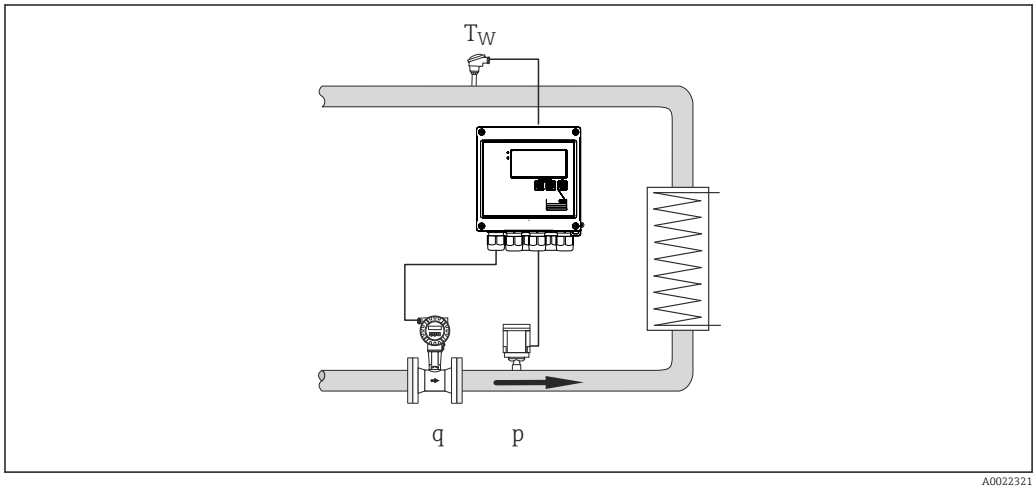

34 Heat differential/p

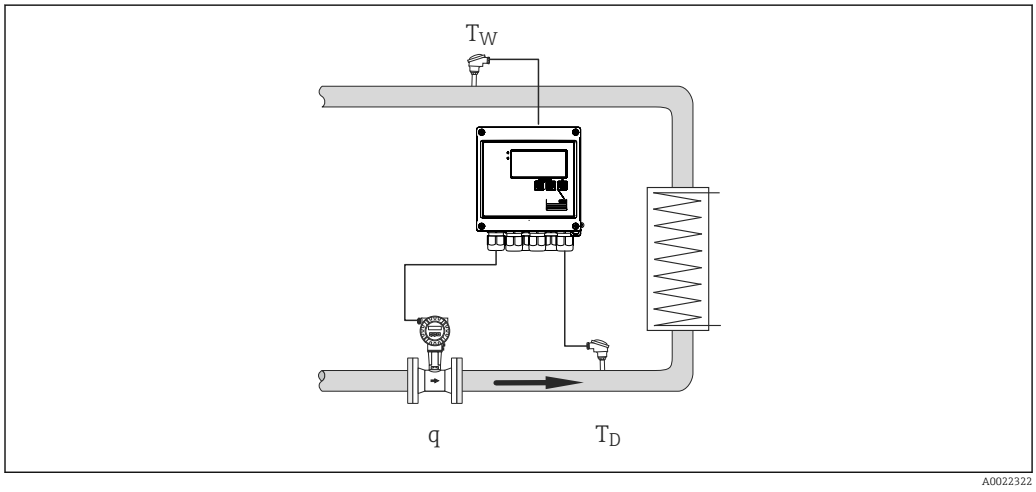

35 Heat differential/T

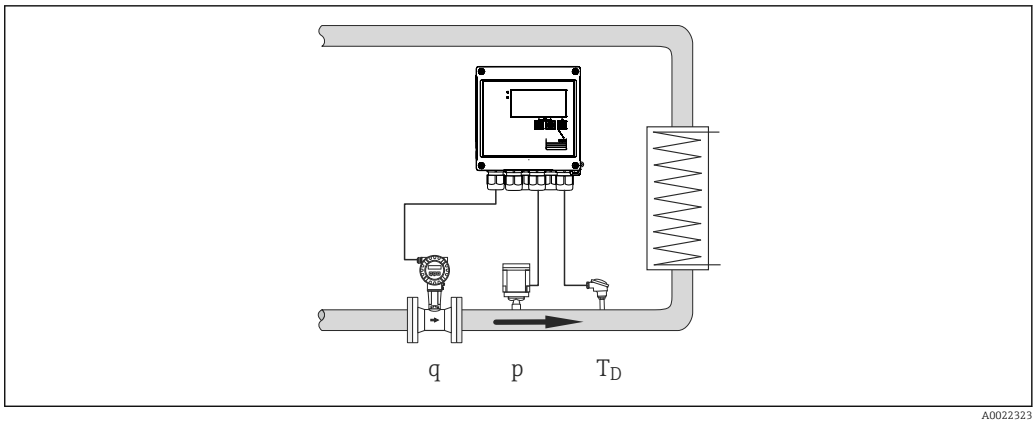

36 *Heat quantity or heat differential/p+T*

Energy calculation	The EngyCal RS33 uses the IAPWS IF97 standard to calculate the mass flow and energy flow of steam. Here, the input variables pressure and temperature are used to calculate the density and enthalpy of steam. Calculated values: ▪ Power ▪ Volume ▪ Mass ▪ Density ▪ Enthalpy ▪ DP flow compensation
Counters	Volume, mass, energy, deficit Optional: Tariff 1, tariff 2
Failure mode/deficit counter	The EngyCal has a user-definable failure mode (no further calculation or calculation with fallback value). With its defined failure mode and separate deficit counter, the device guarantees transparent energy calculation and billing documentation. If further calculation with a fallback value is selected, the entire calculated energy during the error condition (e.g. line break) is counted on a deficit counter. In this case, the output continues to supply the calculated energy value. If values are communicated via buses, they are assigned the value "invalid". An alarm relay can be switched if desired.
Temperature-sensor-matching in the device	The pairing of temperature sensors takes place internally in the EngyCal by using Callendar van Dusen coefficients to store the sensor characteristics. The Callendar van Dusen coefficients are determined by calibrating the temperature sensor. Internal adjustment enables the use of non-paired sensors and also allows one sensor to be replaced independently of the second sensor, while maintaining or increasing accuracy (compared to using paired sensors).
Compensation of differential pressure flow measurement	The calculation of flow based on the differential pressure method is a special form of flow measurement. Volumes or mass flow rates that are determined using the DP method require specific correction. By iteratively solving the equations listed there, the best possible accuracies (approx. 0.6 – 1 %) for DP flow measurements can be achieved. Compensation of flow measurement for throttle methods (orifice plate, nozzle).

The measurement (orifice plate, nozzle, Venturi pipe) is performed in accordance with ISO5167. Flow measurement based on the dynamic pressure method uses the interrelation between differential pressure and flow.

Data logging and logbook

Event logbook:

The EngyCal RH33 BTU meter has a logbook for measured values and a logbook for events.

All parameter changes, limit value violations, alarms and other events are recorded with a timestamp in the event logbook in such a way that they are tamper-proof. At minimum, the last 1600 events are stored in non-volatile memory.

The measured value memory enables process values and calculated vales, as well as counters, to be saved at freely definable intervals. Predefined analyses (day month, year, billing dates) support the transparency of the process flow and ensure a quick overview of consumption values.

All entries in the event logbook, along with the data in the measured value memory, can be read out automatically using the visualization software (Field Data Manager software) and backed up in an SQL database in such a way that they are tamper-proof.

For fast and easy analysis in case of service, an internal diagnostic memory is also available with the error messages that have occurred.

Analysis	No. of analyses
Interval	Approx. 875
Day	260 days
Month/year/billing date	17 years
Events	≥ 1600 (depending on the length of the event text)

Wet steam alarm

If steam condenses, reliable and accurate calculation of the energy quantity is no longer guaranteed. The wet steam alarm indicates the condensation of steam. The aggregate state can be determined on the basis of pressure and temperature. This is required in order to trigger the wet steam alarm.

Limit value monitoring

Three limit values can be freely assigned to the following measured and calculated values: volume flow, temperature, pressure, mass flow, power (heat flow), density, enthalpy, operating volume as well as heat and tariff 1, tariff 2

If the defined limit values are violated, an entry is made in the event logbook. In addition, relays can be switched, and the limit value violation can be indicated on the display. Limit values are also available via the integrated web server.

Tariff counter (optional)

The tariff counters enable the analysis and recording of energy on an additional counter.

There are two tariff counters available. A specified tariff can be activated via an event or via the digital inputs. If the specified event occurs, the energy calculated is counted at this tariff.

Tariff counters enable, for example, invoicing on specific billing dates, consumption-based billing (daytime/nighttime tariff), as well as the analysis of counters when limit values are reached, e.g. depending on power.

Various tariff models are available in the device, e.g. energy, power, time, etc.

The standard counters continue running at the same time, i.e. they are not affected by the activation of the tariff counters.

Real-time clock (RTC)	The device has a real-time clock that can be synchronized via a free digital input or using the Field Data Manager software MS20. The real-time clock continues to run in the event of a power failure. The device logs power on and power off events. The time switches automatically or manually from summer to winter time.
Display	To display measured values, counters and calculated values, six groups are available. Each group can be assigned up to 3 values or counter readings as desired.
Analyzing the stored data– Field Data Manager software MS20	The Field Data Manager software allows the saved measured values, alarms and events, as well as the device configuration to be read out from the device (automatically) and backed up securely in an SQL database in such a way that they are tamper-proof. The software offers centralized data management with a variety of visualization functions. Using an integrated system service, analyses and reports can be compiled, printed and saved fully automatically. Security is guaranteed by the FDA-compliant audit trail of the software and by the extensive user management functionality. Simultaneous access to and analysis of data from different workstations or different users is supported (client-server architecture).
Communication interfaces	A USB interface (with CDI protocol), and optional Ethernet, are used to configure the device and read out the values. ModBus and M-Bus are optionally available as communication interfaces. None of the interfaces has a modifying effect on the device in accordance with PTB Requirement PTBA 50.1.

USB device

Connection:	Type B socket
Specification:	USB 2.0
Speed:	"Full Speed" (max. 12 MBit/sec)
Max. cable length:	3 m (9.8 ft)

Ethernet TCP/IP

The Ethernet interface is optional and cannot be combined with other optional interfaces. It is galvanically isolated (testing voltage: 500 V). A standard patch cable (e.g. CAT5E) can be used to connect the Ethernet interface. A special cable gland is available that allows pre-terminated cables to be routed through the housing. Via the Ethernet interface, the device can be connected to office equipment using a hub or a switch.

Standard:	10/100 Base-T/TX (IEEE 802.3)
Socket:	RJ-45
Max. cable length:	100 m (328 ft)

RS485

Connection:	3-pin plug-in terminal
Transmission protocol:	RTU
Transmission rate:	2400/4800/9600/19200/38400
Parity:	choose from none, even, odd

Modbus TCP

The Modbus TCP interface is optional and cannot be ordered with other optional interfaces. It is used to connect the device to higher-order systems to transmit all measured values and process values. The Modbus TCP interface is physically identical to the Ethernet interface.

Modbus RTU

The Modbus RTU (RS-485) interface is optional, and cannot be ordered with other optional interfaces.

It is galvanically isolated (testing voltage: 500 V) and is used to connect to higher-level systems to transmit all measured values and process values. It is connected via a 3-pin plug-in terminal.

M-Bus

The M-bus (meter bus) interface is optional and cannot be ordered with other optional interfaces. It is galvanically isolated (testing voltage: 500 V) and is used to connect to higher-level systems to transmit all measured values and process values. It is connected via a 3-pin plug-in terminal.

13.2 Input

Current/pulse input

This input can be used either as a current input for 0/4 to 20 mA signals or as a pulse or frequency input.

The input is galvanically isolated (500 V testing voltage towards all other inputs and outputs).

Cycle time

The cycle time is 250 ms when using the RTD input.

Response time

In the case of analog signals, the response time is the time between the change at the input and the time when the output signal is equivalent to 90 % of the full scale value. The response time increases by 250 ms if an RTD with 3-wire measurement is connected.

Input	Output	Response time [ms]
Current	Current	≤ 600
Current	Relay/digital output	≤ 600
RTD	Current/relay/digital output	≤ 600
Cable open circuit detection	Current/relay/digital output	≤ 600
Cable open circuit detection, RTD	Current/relay/digital output	≤ 1100
Pulse input	Pulse output	≤ 600

Current input

Measuring range:	0/4 to 20 mA + 10 % overrange
Accuracy:	0.1 % of full scale value
Temperature drift:	0.01 %/K (0.0056 %/°F) of full scale value
Loading capacity:	Max. 50 mA, max. 2.5 V

Input impedance (load):	50 Ω
HART® signals	Not affected
A/D converter resolution:	20 bit

Pulse/frequency input

The pulse/frequency input can be configured for different frequency ranges:
- Pulses and frequencies up to 12.5 kHz
- Pulses and frequencies up to 25 Hz (filters bounce contacts, max. bounce time: 5 ms)

Minimum pulse width:	
Range up to 12.5 kHz	40 µs
Range up to 25 Hz	20 ms
Maximum permissible contact bounce time:	
Range up to 25 Hz	5 ms
Pulse input for active voltage pulses and contact sensors as per EN 1434-2, Class IB and IC:	
Non-conductive state	≤ 1 V
Conductive state	≥ 2 V
No-load supply voltage:	3 to 6 V
Current limiting resistance in the power supply (pull-up at input):	50 to 2 000 kΩ
Maximum permissible input voltage:	30 V (for active voltage pulses)
Pulse input for contact sensors as per EN 1434-2, Class ID and IE:	
Low-level	≤ 1.2 mA
High-level	≥ 2.1 mA
No-load supply voltage:	7 to 9 V
Current limiting resistance in the power supply (pull-up at input):	562 to 1 000 Ω
Not suitable for active input voltages	
Current/pulse input:	
Low-level	≤ 8 mA
High-level	≥ 13 mA
Loading capacity:	Max. 50 mA, max. 2.5 V
Input impedance (load):	50 Ω
Accuracy during frequency measurement:	
Basic accuracy:	0.01 % of measured value
Temperature drift:	0.01 % of measured value over entire temperature range

2 x current/RTD input

These inputs can be used either as current inputs (0/4 to 20 mA) or as RTD inputs (RTD = Resistance Temperature Detector). Here, one input is provided for the temperature signal, the other for the pressure signal.

The two inputs are galvanically connected but galvanically isolated from other inputs and outputs (testing voltage: 500 V).

Current input

Measuring range:	0/4 to 20 mA + 10 % overrange
Accuracy:	0.1 % of full scale value
Temperature drift:	0.01 %/K (0.0056 %/°F) of full scale value
Loading capacity:	Max. 50 mA, max. 2.5 V
Input impedance (load):	50 Ω
A/D converter resolution:	24 bit
HART® signals are not affected.	

RTD input

Pt100, Pt500 and Pt1000 resistance temperature detectors can be connected to this input.

Measuring ranges:	
Pt100_exact:	−200 to +300 °C (−328 to +572 °F)
Pt100_wide:	−200 to +600 °C (−328 to +1 112 °F)
Pt500:	−200 to +300 °C (−328 to +572 °F)
Pt1000:	−200 to +300 °C (−328 to +572 °F)
Connection method:	2-, 3- or 4-wire connection
Accuracy:	4-wire: 0.06 % of measuring range 3-wire: 0.06 % of measuring range + 0.8 K (1.44 °F)
Temperature drift:	0.01 %/K (0.0056 %/°F) of measuring range
Delta T measurement (differential measurement between both RTD inputs):	0.03 °C (0.054 °F)
Characteristic curves:	DIN EN 60751:2008 IPTS-90
Max. cable resistance:	40 Ω
Cable open circuit detection:	Outside the measuring range

Digital inputs

Two digital inputs are available for switching the following functions.

Digital input 1	Digital input 2
Activate tariff counter 1 Time synchronization Lock device (Block set up)	Activate tariff counter 2 Time synchronization Lock device (Block set up)

Input level:

As per IE C61131-2 Type 3:

Logical "0" (corresponds to −3 to +5 V), activation with logical "1" (corresponds to +11 to +30 V)

Input current:

Max. 3.2 mA

Input voltage:

Max. 30 V (steady-state, without destroying input)

13.3 Output

Current/pulse output (option)

This output can be used either as a 0/4 to 20 mA current output or as a voltage pulse output.

The output is galvanically isolated (500 V testing voltage towards all other inputs and outputs).

Current output (active)

Output range:	0/4 to 20 mA + 10 % overrange
Load:	0 to 600 Ω (as per IEC 61131-2)
Accuracy:	0.1 % of upper range value
Temperature drift:	0.01 %/K (0.0056 %/°F) of upper range value
Inductive load:	Max. 10 mH
Capacitance load:	Max. 10 µF
Ripple:	max. 12 mVpp at 600 Ω for frequencies < 50 kHz
D/A converter resolution:	14 bit

Pulse output (active)

Frequency:	Max. 12.5 kHz
Pulse width:	Min. 40 µs
Voltage level:	Low: 0 to 2 V High: 15 to 20 V
Maximum output current:	22 mA
Short-circuit proof	

2 x relay output

The relays are designed as normally-open contacts. The output is galvanically isolated (1 500 V testing voltage towards all other inputs and outputs).

Max. relay switching capacity:	AC: 250 V, 3 A DC: 30 V, 3 A
Minimum contact load:	10 V, 1 mA
Min. switching cycles:	$>10^5$

2 x digital output, open collector (option)

The two digital outputs are galvanically isolated from one another and from all other inputs and outputs (testing voltage: 500 V). The digital outputs can be used as status or pulse outputs.

Frequency:	Max. 1 kHz
Pulse width:	Min. 500 µs
Current:	Max. 120 mA
Voltage:	Max. 30 V
Voltage drop:	Max. 2 V in conductive state
Maximum load resistance:	10 kΩ For higher values, the switching edges are flattened.

Auxiliary voltage output (transmitter power supply)

The auxiliary voltage output can be used to power the transmitter or control the digital inputs. The auxiliary voltage is short-circuit proof and galvanically isolated (500 V testing voltage towards all other inputs and outputs).

Output voltage:	24 V DC ±15 % (not stabilized)
Output current:	Max. 70 mA
HART® signals are not affected.	

13.4 Electrical connection

Terminal assignment

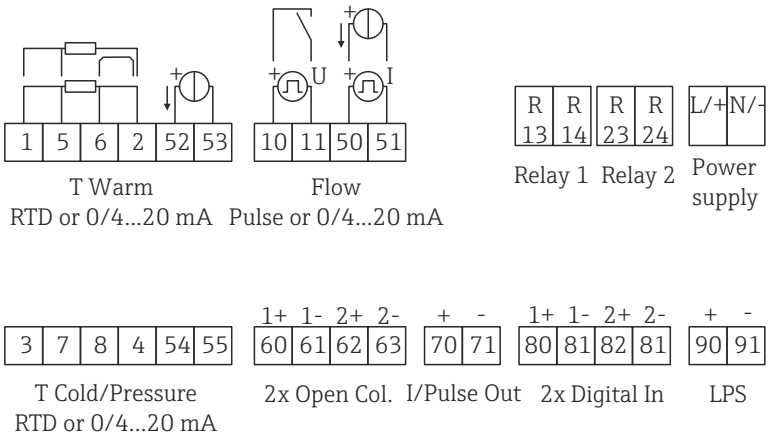

A0022341

37 Terminal assignment of EngyCal

Supply voltage

- Low-voltage power unit: 100 to 230 V AC(−15 %/ +10 %) 50/60 Hz
- Extra-low voltage power unit:
  24 V DC (−50 % / +75 %)
  24 V AC (±50 %) 50/60 Hz

An overload protection element (rated current ≤ 10 A) is required for the power cable.

Power consumption

15 VA

13.5 Performance characteristics

Reference operating conditions

- Power supply 230 V AC ±10 %; 50 Hz ±0.5 Hz
- Warm-up period > 2 h
- Ambient temperature 25 °C ±5 K (77 °F ±9 °F)
- Humidity 39 % ±10 % RH.

Arithmetic unit

Medium	Size	Range
Steam	Temperature measuring range	0 to +800 °C (32 to +1 472 °F)
	Pressure measuring range	0 to 1 000 bar (0 to 14 500 psi)
	Measurement and calculation interval	500 ms

Calculation standard IAPWS IF97

Typical accuracy of steam mass and energy measurement in a complete steam measuring point: approx. 1.5% (e.g. iTHERM ModuLine, Cerabar, Prowirl)

13.6 Installation

Installation location	Wall/pipe mounting, panel or DIN rail as per IEC 60715
Orientation	The orientation is determined by the readability of the display.

13.7 Environment

Ambient temperature range	−20 to +60 °C (−4 to +140 °F)
Storage temperature	−30 to +70 °C (−22 to +158 °F)
Climate class	As per IEC 60 654-1 Class B2, as per EN 1434 environment class C
Humidity	Maximum relative humidity 80 % for temperatures up to 31 °C (87.8 °F), decreasing linearly to 50 % relative humidity at 40 °C (104 °F).
Electrical safety	As per IEC 61010-1 and CAN C22.2 No 1010-1. ▪ Class II equipment ▪ Overvoltage category II ▪ Pollution level 2 ▪ Overcurrent protection ≤ 10 A ▪ Operating altitude: up to 2 000 m (6 560 ft.) above MSL
Degree of protection	▪ Panel mounting: IP65 at front, IP20 at rear ▪ DIN rail: IP20 ▪ Field housing: IP66, NEMA4x (for cable gland with double seal insert: IP65)
Electromagnetic compatibility	As per EN 1434-4, EN 61326 and NAMUR NE21

13.8 Mechanical construction

Design and dimensions

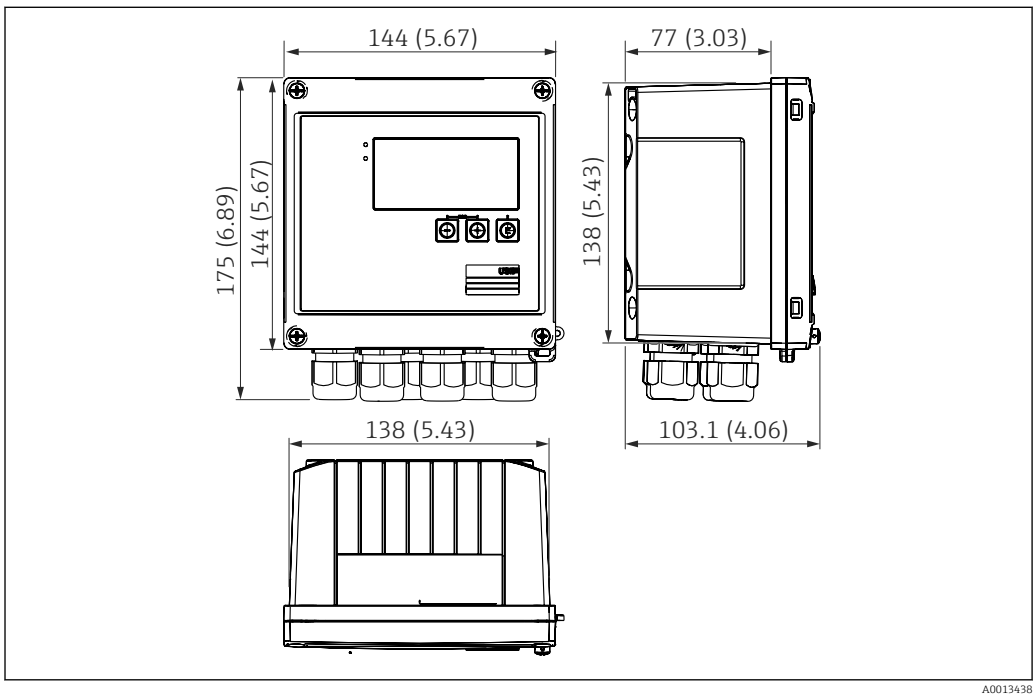

38 *EngyCal housing; dimensions in mm (in)*

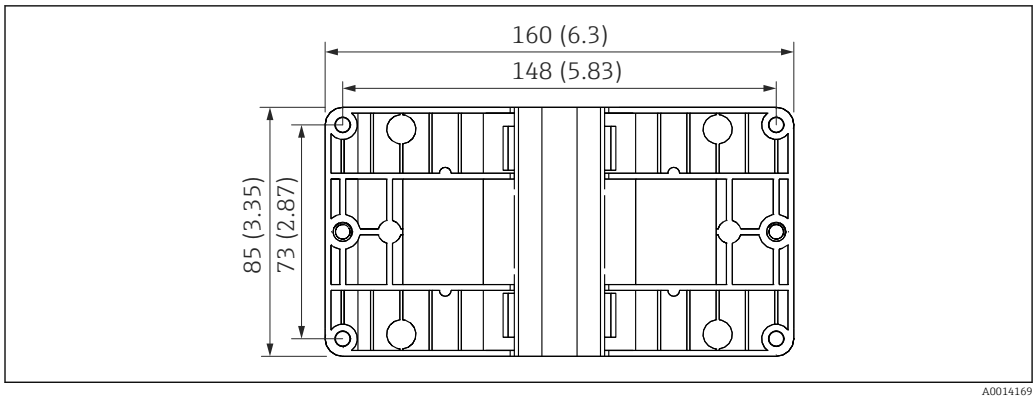

39 *Mounting plate for wall, pipe and panel mounting; dimensions in mm (in)*

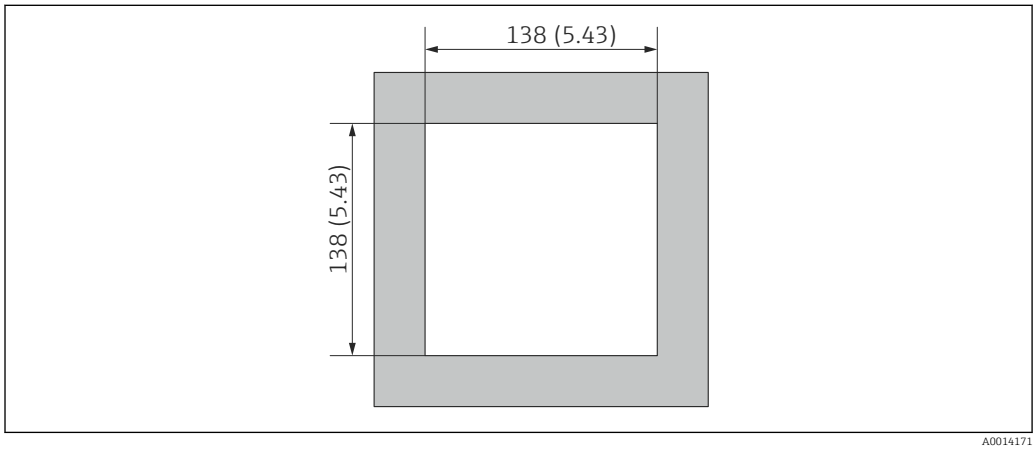

40 *Panel cutout in mm (in)*

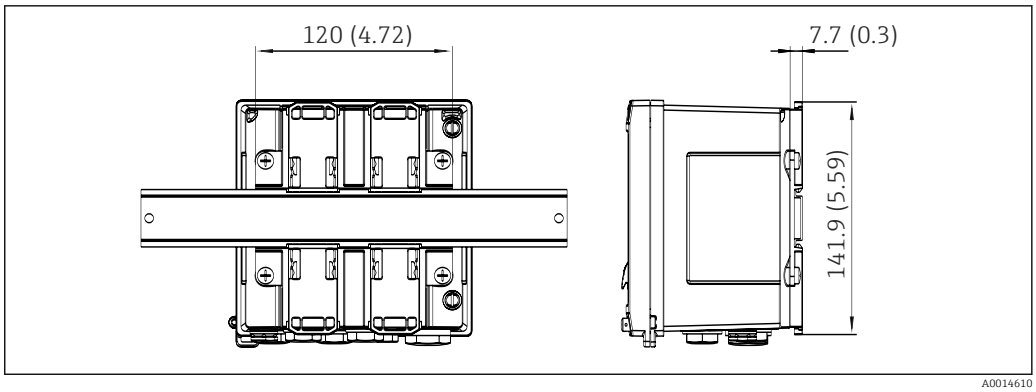

41 Dimensions of DIN rail adapter in mm (in)

Weight	Approx. 700 g (1.5 lbs)
Materials	Housing: fiber-glass reinforced plastic, Valox 553
Terminals	Spring terminals, 2.5 mm² (14 AWG); auxiliary voltage with plug-in screw terminal (30-12 AWG; torque 0.5 to 0.6 Nm) .

13.9 User interface

Languages	You can choose from one of the following operating languages on the device: English, German, French, Spanish, Italian, Dutch, Portuguese, Polish, Russian, Czech
Display elements	▪ Display: 160 x 80 dot-matrix LCD with white backlighting, color changes to red in the event of an alarm, active display area 70 x 34 mm (2.76" x 1.34") ▪ LED status display: Operation: 1 x green Fault message: 1 x red

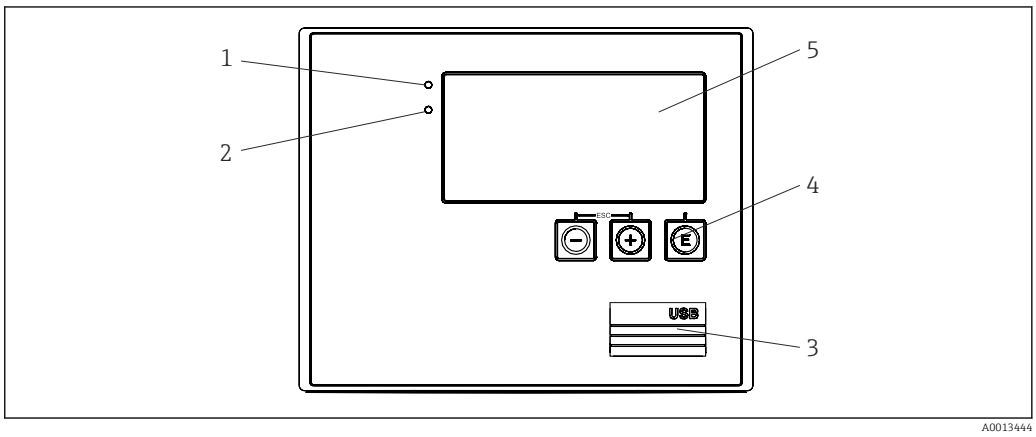

42 Display and operating elements

1 *Green LED, "Operation"*
2 *Red LED, "Fault message"*
3 *USB connection for configuration*
4 *Operating keys: -, +, E*
5 *160x80 dot-matrix display*

Local operation	3 keys, "-", "+", "E".
Configuration interface	USB interface at front, optional Ethernet: configuration via PC with FieldCare Device Setup configuration software.
Data logging	**Real-time clock** ▪ Deviation: 15 min per year ▪ Power reserve: 1 week
Software	▪ **Field Data Manager software MS20**: visualization software and database for analyzing and evaluating the measured data and calculated values as well as tamper-proof data logging. ▪ **FieldCare Device Setup**: The device can be configured with the FieldCare PC software. FieldCare Device Setup is included in the delivery with the RXU10-G1 (see "Accessories") or can be downloaded free of charge from www.endress.com/fieldcare .

13.10 Certificates and approvals

Current certificates and approvals for the product are available at www.endress.com on the relevant product page:

1. Select the product using the filters and search field.
2. Open the product page.
3. Select **Downloads**.

14 Appendix

14.1 Operating functions and parameters

If a number in the form XXXXXX-XX is specified in a table row next to a parameter, the parameter can be accessed directly.

For this purpose go to the menu **Expert** → **Direct Access** and enter the number specified.

14.1.1 Language menu

Deutsch English Español Français Italiano Nederlands Polski Portuguese Russkij ceština	Select the operating language of the device from the list.

14.1.2 Display/operation menu

Change group	Select a group to be displayed. Automatic change between the configured display groups or display one of the 6 display groups

Display brightness	Adjust brightness of the display. Number: 1-99

Display contrast				Adjust the contrast of the display. Number: 20-80
Stored values				Display the analyses stored in the device .
	Display			Select data to be displayed.

14.1.3 Setup menu

In this setup, you can select only the most common/important operating options. Special settings can also be configured via "Expert".

Units			100001-00	Select the unit system (SI or US units). All units are switched to the selected unit system, but configured values are not converted.
Pulse value			210013-00	Unit for the pulse value, e.g. pulse/l, l/pulse...
Value			210003-00	Pulse factor = factor which, multiplied by an input impulse, yields the physical value. Example: 1 pulse corresponds to 5 m^3, pulse value is set to "m^3/pulse" → enter "5" here. Decimal number, 8 digits including leading sign and decimal separator.
Date/time				Set date/time.
	UTC time zone			Current UTC time zone (UTC = coordinated universal time).
	Actual date			Actual date Format as configured under date format.
	Actual time			Actual time HH:MM, 12/24-hour as configured in the time format.
	Changing			The date and time can be changed here.
		UTC time zone	120010-00	
		Date/time	120013- 00	
Advanced setup				Additional settings that are not essential for the basic operation of the device.
	System			Basic settings that are needed to operate the device (e.g. date, time, communication settings etc.)
		Access code	100000-00	4-digit number. This code can be used to protect the setup from unauthorized access. In order to change any parameter the correct code must be entered. Factory default is "0", this means changes can be done at any time. Make a note of the code and store in a safe place.
		Device tag name	000031-00	Individual device tag name (max. 17 characters).
		Decimal separator	100003-00	Use this function to select the decimal separator to represent a number.
		Fault switching	100002-00	If the device detects a system error (e.g. hardware defect) or a fault (e.g. cable open circuit), the selected output switches. Selection: Relay 1/2 or OpenCollector 1/2
		Date/time setting		Date/time settings
			Date format	110000-00	Select the date format.
			Time format	110001-00	Select time format.
		Date/time		Set date/time.
			UTC time zone	120000-00	Current UTC time zone (UTC = coordinated universal time)

			Actual date		120001-00	Actual date Format as configured under date format.
			Actual time		120002-00	Actual time HH:MM, 12/24-hour as configured in the time format.
			Changing			The date and time can be changed here.
				UTC time zone	120010-00	Selection of the UTC time zone (UTC = coordinated universal time).
				Date/time	120013-00	Set the current date and time.
			NT/ST changeover			Settings for summer time changeover
				NT/ST changeover	110002-00	Function for summer/normal time changeover Automatic: Changes to the local regional regulations; Manual: Changeover times can be set in the following addresses ; Off: No changeover times required.
				NT/ST region	110003-00	Selects the regional settings for summer/normal time changeover.
				Begin summer time		
				Occurrence	110005-00	Day in spring on which the switch from standard time to summer time takes place, e.g. for the fourth Sunday in March: select 4.
				Day	110006-00	Day of the week on which the switch from standard time to summer time takes place in spring, e.g. for the fourth Sunday in March: select Sunday.
				Month	110007-00	Month on which the switch from standard time to summer time takes place in spring, e.g. for the fourth Sunday in March: select March.
				Date	110008-00	Day, when in the spring a change from normal to summer time occurs.
				Time	110009-00	Time when the clocks go forward one hour on the day the time changes from standard time to summer time (format: hh:mm).
				End summer time		
				Occurrence	110011-00	Day on which the switch back from summer time to standard time takes place in fall, e.g. for the fourth Sunday in October: select 4.
				Day	110012-00	Day of the week on which the switch back from summer time to standard time takes place in fall, e.g. for the fourth Sunday in October: select Sunday.
				Month	110013-00	Month in which the switch back from summer time to standard time takes place in fall, e.g. for the fourth Sunday in October: select October.
				Date	110014-00	Day, when in the autumn a change from summer to normal time occurs.
				Time	110015-00	Time when the clocks go back one hour on the day the time changes from summer time to standard time (format: hh:mm).
		Units				Setting of the unit of calculated variables
			Units		100001-00	Use this function to select the unit system (SI or US units). All units are switched to the factory settings for the selected unit system, but configured values are not converted.
			Mass flow		410000-00	Use this function to select the desired unit in which this variable should be output/saved.
			Decimal places		410001-00	Number of decimal places for displaying the mass flow
			Power		410002-00	Use this function to select the desired unit in which this variable should be output/saved.
			Decimal places		410003-00	Number of decimal places for displaying the heat flow rate.

			Density	410006-00	Use this function to select the desired unit in which this variable should be output/saved.
			Decimal places	410007-00	Number of decimal places for displaying the density.
			Enthalpy	410008-00	Use this function to select the desired unit in which this variable should be output/saved.
			Decimal places	410009-00	Number of decimal places for displaying the enthalpy.
			Mass counter	410010-00	Use this function to select the desired unit in which this variable should be output/saved.
			Decimal places	410011-00	Number of decimal places for displaying the mass.
			Energy	410012-00	Use this function to select the desired unit in which this variable should be output/saved.
			Decimal places	410013-00	Number of decimal places for displaying the heat
		Ethernet			Settings that are required if the Ethernet interface of the device is to be used
			DHCP	150002-00	The device can get its Ethernet settings through DHCP. ▪ The determined settings are displayed only after the setup has been applied. ▪ Note: The unit always gets the same IP address if the leasing time is set long enough on the DHCP server. The PC software needs the IP address determined to establish a connection.
			IP address	150006-00	If DHCP = 'No', enter the IP address for the device here. This is assigned by the network administrator. If DHCP = 'Yes', the IP address obtained by DHCP is displayed here.
			Subnet mask	150007-00	If DHCP = 'No', enter the subnet mask here. This is assigned by the network administrator. If DHCP = 'Yes', the subnet mask obtained by DHCP is displayed here.
			Gateway	150008-00	If DHCP = 'No', enter the gateway here. This is assigned by the network administrator. If DHCP = 'Yes', the gateway obtained by DHCP is displayed here.
			Web server	470000-00	Activation and deactivation of web server functionality The instantaneous values can only be displayed using an Internet browser when the web server is activated. Only possible via the Ethernet interface.
			Port	470001-00	The web server communicates through this communication port. If the network is protected by a firewall, this port may have to be enabled. Contact your network administrator. Only visible if web server = yes.
		Modbus			Configure the Modbus settings for the device. Only visible for devices with Modbus (option).
			Port	480004-00	Port via which the Modbus protocol can be addressed.
			Byte sequence	480005-00	Byte addressing, i.e. the transmission sequence of the bytes, is not specified in the Modbus specification. It is therefore important to coordinate and align the addressing method between the master and the slave during commissioning. This can be configured here.
			Reg. 0 to 2		Specify which values can be read out.
				Value	500000-00	Use this function to select which value should be transferred.

				Analysis	500001-00	Select which counter value (e.g. interval, daily counter) is to be transmitted. Only if a counter has been set for "Value".
			Reg. 3 to 5			Specify which values can be read out.
				Value	500000-01	Use this function to select which value should be transferred.
				Analysis	500001-01	Select which counter value (e.g. interval, daily counter) is to be transmitted.
			Reg. 6 to 8			Specify which values can be read out.
				Value	500000-02	Use this function to select which value should be transferred.
				Analysis	500001-02	Select which counter value (e.g. interval, daily counter) is to be transmitted.
			...		...	...
			Reg. 87 to 89			Specify which values can be read out.
				Value	500000-29	Use this function to select which value should be transferred.
				Analysis	500001-29	Select which counter value (e.g. interval, daily counter) is to be transmitted.
		M-Bus				Configuration of M-Bus settings for the device For devices with M-Bus (optional) only.
			Device address		490001-00	Enter the device address under which this device should be reachable on the M-bus.
			Baud rate		490000-00	Select the transmission speed used for communication via M-Bus.
			ID number		490002-00	The identification number (for secondary addressing) is an 8-digit unique number. This number can be modified on the unit, though not via M-BUS.
			Manufacturer		490003-00	Manufacturer ID
			Version		490004-00	Displays the M-Bus version.
			Medium		490005-00	The medium is always 0E (= bus/system)
			Number		490006-00	Number of values that are to be read out via the M-Bus.
			Value 1			Specify which values can be read out.
				Value	500000-00	Use this function to select which value should be transferred.
				Analysis	500001-00	Select which counter associated with the value is to be transmitted. Only if a counter has been set for "Value".
			...		...	...
			Value 5			Specify which values can be read out.
				Value	500000-04	Use this function to select which value should be transferred.
				Analysis	500001-04	Select which counter associated with the value is to be transmitted. Only if a counter has been set for "Value".
		Device options				Hardware and software options
			Optional outputs		990000-00	
			Communication		990001-00	
			Protocol		990007-00	

			DP flow	990003-00	
			Tariff	990005-00	
			Callendar v. Dusen	990004-00	
	Inputs				Settings for the analog and digital inputs
		Flow			Settings for the flow input.
			Signal type	210000-00	Select the type of signal connected. ▪ 4-20 mA: Current input ▪ 4-20 mA (DP flow): Input for flow measurements based on the differential pressure method (e.g. orifice plate) ▪ 0-20 mA: Current input ▪ Pulse U+IB+IC: Input for active voltage pulses and contact sensors as per EN 1434-2, Class IB + IC. ▪ Pulse Cl. ID+IE: Input for contact sensors as per EN 1434-2, Class ID + IE. ▪ Pulse I: Current pulse input: ≤ 8 mA Low level, ≥ 13 mA High level.
			Design	210070-00	Set the type of primary device used. Only for "Signal type" = "4-20 mA (DP-Flow)"
			Channel identifier	210001-00	Name of the measuring point connected to this input. Customized text, 6 characters.
			Pulse input	210002-00	Specify whether the pulse input is a fast input (up to 12.5 kHz) or slow input (up to 25 Hz). Only if "Pulse" has been selected as the signal type.
			Pulse value	210003-00	Pulse factor = factor which, multiplied by an input impulse, yields the physical value. Example: 1 pulse equals 5 m^3 → enter "5" here. Decimal number, max. 8 digits including decimal separator. Only if Pulse has been selected as the signal type.
			Unit	210004-00	Specify the technical (physical) unit for the measuring point connected to this input.
			Decimal places		Number of places after decimal point for the display. e.g. measured value: 20.12348 l/s The following can be displayed: ▪ None: 20 l/s ▪ One: 20.1 l/s ▪ Two: 20.12 l/s ▪ Three: 20.123 l/s The value is rounded where necessary.
			Counter unit	210005-00	Technical unit of the count input, e.g. liter, m^3, etc.
			Decimal places	210007-00	Number of digits after the decimal point for the counter.
			DP unit	210072-00	Unit of the differential pressure. Only for signal type = 4-20 mA (DP-Flow)
					Transmitters convert the physical measured variable into standardized signals. Enter the start of the measuring range here. Example: 0 to 100 m^3/h of the sensor converted to 4 to 20 mA : 0. Decimal number, max. 8 digits including decimal separator. Only for 0/4-20 mA.

			Meas. range end		Enter the end of the measuring range here, e.g. "100" for a transmitter with 0 to 100 m^3/h. Decimal number, max. 8 digits including decimal separator Only for 0/4-20 mA.
			Decimal places	410005-00	Decimal places for displaying the differential pressure. Only for 4-20 mA (DP-Flow).
			Low flow cut off		If the volume flow recorded is below the set value, these quantities are not added to the counter. If the input is scaled from 0 to y, or if the pulse input is used, all values that are smaller than the set value are not recorded. If the input is scaled from -x to +y, all values around the zero point (e.g. also negative values) are not recorded. Decimal number, max. 8 digits including decimal separator.
			Characteristic		Select the flow characteristic depending on the settings at the output of the differential pressure transmitter. Linear: if the output of the DP transmitter is scaled in mbar/inH2O (characteristic at the DPT output is linear). Square: if the output of the DP transmitter is scaled in mass or volume units e.g. kg/h, ton/h, m^3/h (characteristic at the DPT output is squared). Only for 4-20 mA (DP-Flow).
			Diameter unit	210076-00	Unit of the internal diameter of the pipe. Only for signal type = 4 to 20 mA (DP-Flow)
			D at 20 °C	210077-00	Pipe inner diameter (D) under design conditions at 20 °C (68 °F). Decimal number, max. 8 digits including decimal separator. Only for signal type = 4-20 mA (DP-Flow)
			d at 20 °C	210078-00	Pipe inner diameter of the primary element (d) under design conditions at 20 °C (68 °F). Decimal number, max. 8 digits including decimal separator. Only for signal type = 4 to 20 mA (DP-Flow)
			K-factor	210079-00	Enter the K-factor (blockage factor) for the pitot tube (see probe nameplate). Decimal number, max. 8 digits including decimal separator. Only for signal type = 4 to 20 mA (DP-Flow) and device type= Pitot tube
			Design density	210080-00	Density under design conditions (at design pressure/temperature). Decimal number, max. 8 digits including decimal separator. Only for signal type = 4 to 20 mA (DP-Flow) and device type = V-Cone or Gilflo
			Sensor material	210081-00	Material of the sensor. Only for signal type = 4 to 20 mA (DP-Flow) and device type = Orifice plate, Nozzle, Venturi nozzle, Venturi tube
			Pipe material	210082-00	Material of the pipe. Only for signal type = 4 to 20 mA (DP-Flow) and device type = Orifice plate, Nozzle, Venturi nozzle, Venturi tube, Pitot tube
		Temperature			Settings for the temperature input.
			Signal type	220000-00	Select the type of signal connected.
			Type of connection	220001-00	Specify whether RTD assembly is connected with 3 or 4 wires. Only for signal type Pt100, Pt500 or Pt1000.
			Channel identifier	220002-00	Name of the measuring point connected to this input. Customized text, max. 6 characters.
			Unit	220003-00	Specify the technical (physical) unit for the measuring point connected to this input.
			Decimal places	220004-00	Number of places after decimal point for the display.

			Range		220005-00	Set the preferred measuring range. Can only be set for Pt100 or platinum RTD (CvD). A small measuring range increases the accuracy of temperature measurement.
			Range start		220006-00	Transmitters convert the physical measured variable into standardized signals. Enter the start of the measuring range here. Only for 0/4 to 20 mA. Decimal number, max. 8 digits including decimal separator.
			Meas. range end		220007-00	Enter the end of the measuring range here. Only for 0/4 to 20 mA. Decimal number, max. 8 digits including decimal separator.
			Default value		220009-00	Specify a fixed temperature value to be used by the device for calculations. Only for signal type = default value
			Linearization CvD			Describe the temperature curve of the connected resistance thermometer by entering the Callendar van Dusen (CvD) coefficients (sensor calibration temperature). Only for signal type = Platinum RTD(CvD)
				Coefficient R0	220070-00	Enter the coefficient R0 as per the calibration datasheet. Decimal number, max. 8 digits including decimal separator.
				Coefficient A	220071-00	Enter the coefficient A as per the calibration datasheet. Decimal number, max. 8 digits including decimal separator.
				Coefficient B	220072-00	Enter the coefficient B as per the calibration datasheet. Decimal number, max. 8 digits including decimal separator.
				Coefficient C	220073-00	Enter the coefficient C as per the calibration datasheet. Decimal number, max. 8 digits including decimal separator.
		Pressure				Settings for the pressure input
			Signal type		220000-01	Select the signal type connected or the "Default value". The default value is set in the "Default value" menu item.
			Channel identifier		220002-01	Name of the measuring point connected to this input. Customized text, max. 6 characters.
			Unit		220003-01	Specify the technical (physical) unit for the measuring point connected to this input.
			Decimal places		220004-01	Number of places after decimal point for the display.
			Default value		220009-01	Specify a fixed value to be used by the device for calculations. Only for signal type = default value.
		Digital 1/2				Settings only required if digital inputs (e.g. events) are to be used.
			Function		DI 1: 250000-00 DI 2: 250000-01	Select the required function, . Digital inputs are High active; this means the described effect is achieved by a high input. Low = −3 to +5 V High = +12 to +30 V
	Outputs					Settings only required if outputs (e.g. relays or analog outputs) are to be used.
		Universal output				Settings for the universal output (current or pulse output).
			Signal type		310000-00	Select the output signal for this channel.
			Channel/value		310001-00	Select which channel or calculated value is to be output at the output.

			Start value	310003-00	Configure which value corresponds to "0/4 mA". Numerical value, max. 8 digits including decimal separator (can only be selected for the 0/4 to 20 mA signal type).
			Full scale value	310004-00	Configure which value corresponds to "20 mA". Numerical value, max. 8 digits including decimal separator (can only be selected for the 0/4 to 20 mA signal type).
			Damping	310005-00	Time constant of the first order low pass for the output signal. This is used to prevent severe fluctuations in the output signal (can only be selected for the 0/4 to 20 mA signal type). Numerical value, max. 8 digits including decimal separator.
			Pulse value	310006-00	The pulse value defines which quantity corresponds to an output pulse (e.g. 1 pulse = 5 liters). Numerical value, max. 8 digits including decimal separator.
			Pulse width	310007-00	The pulse width limits the maximum possible output frequency of the pulse output. Define a fixed or dynamic pulse width.
			Pulse width	310008-00	You can set the pulse width within the range 0.04 to 1000 ms here. Numerical value, max. 8 digits including decimal separator. Visible only if a user-defined pulse width was selected.
		Open Collector 1/2			Settings for the open collector output (pulse or status).
			Function	OC 1: 320000-00 OC 2: 320000-01	Specify what the open collector output should output (pulses or status).
			Mode of operation	320001-00 320001-01	Function of the open collector: ▪ NC contact: The contact is closed in its quiescent state (maximum safety). ▪ NO contact: The contact is open in its quiescent state.
			Channel/value	320002-00 320002-01	Select which channel/value is to be output at the output. Only for function = pulse output.
			Pulse value	320004-00 320004-01	The pulse value defines which quantity corresponds to an output pulse (e.g. 1 pulse = 5 liters). Only for function = pulse output.
			Pulse width	320005-00 320005-01	The pulse width limits the maximum possible output frequency of the pulse output. Define a fixed or dynamic pulse width. Only for function = pulse output.
			Pulse width	320006-00 320006-01	You can set the pulse width within the range 0.5 to 1000 ms here. Numerical value, max. 8 digits including decimal separator. Visible only if a user-defined pulse width was selected.
		Relay			Setup for the selected relay
			Mode of operation	Relay 1: 330000-00 Relay 2: 330000-01	Relay function: ▪ NC contact: The relay is closed in its quiescent state (maximum safety). ▪ NO contact: The relay is open in its quiescent state.
	Application				Definition of various application-specific settings (e.g. group settings, limit values etc.).
		Op. mode steam		400014-00	Calculation of the heat quantity using different calculation methods: ▪ Heat quantity (temperature + pressure in steam) ▪ Heat differential /p (temperature in condensate, pressure in steam) ▪ Heat differential /T (temperature in condensate, temperature in steam) ▪ Heat differential /p+T (temperature in steam, pressure in steam)
		Wet steam alarm		400010-00	Behavior for wet steam alarm (in event of partial condensation of the steam).

		Switches			400011-00	Action for wet steam alarm.
		Tariff 1/2				Tariff counters for determining the energy or mass during specific process conditions or statuses. The tariff counters have no effect on the "normal" counter.
			Tariff model		Tariff 1: 430000-00 Tariff 2: 430000-01	Define which parameters are used to control the tariff counter. The deficit counter totalizes the energy or mass during an error (e.g. open circuit). To calculate the deficits, the error values for temperature and pressure are used.
			Limit value		430001-00 430001-01	Depending on which variable is the tariff counter to be enabled? Example: The amount of energy should be recorded on the tariff counter when a power rating of 100 kW is exceeded → Set "Upper limit value".
			Value		430002-00 430002-01	Enter the limit value at which the tariff counter is activated, i.e. when the energy or mass flow is totalized. Numerical value, max. 15 digits including decimal separator.
			Unit		430003-00 430003-01	Enter the unit for the tariff. Customized text, max. 9 characters.
			From		430004-00 430004-01	Enter the time at which the tariff counter is activated, i.e. when the quantity is totalized (format: HH:MM). Visible only if Time has been selected as the tariff model.
			To		430005-00 430005-01	Enter the time at which the tariff counter is deactivated (format: HH:MM). Visible only if Time has been selected as the tariff model.
			Counter type		430006-00 430006-01	Specify whether an energy or mass unit is to be used for the tariff counter.
		Data logging				Settings for signal analysis (saving).
			Synchron. time		440001-00	Time for completing the signal analysis. If, for example, 07:00 is entered, then the daily analysis will run from 07:00 on one day until 07:00 on the following day. Format: HH:MM
			Interval		440000-00	Define the interval at which signal analyses are to be stored. Min, max and average values of the daily and monthly analyses, etc. are determined from the averages of the interval.
			Billing date		440002-00	Specify how many billing date analyses should take place each year.
			Billing date 1/2			Specify when the billing date analysis should take place.
				Day	440003-00 440003-01	Enter the date on which this billing date analysis is to be created (1-31).
				Month	440004-00 440004-01	Enter the month in which this billing date analysis is to be created (picklist).
		Limit values				Limit values can monitor the measured values. In the event of an alarm violation relays can be switched, for example.
			Limit value 1 to 3			View or change the settings for the selected limit value.
				Channel/value	450000-00 450000-01 450000-02	Select which input or calculated value the limit value refers to.
				Type	450001-00 450001-01 450001-02	Type of limit value (depends on the input variable).

				Limit value	450002-00 450002-01 450002-02	Limit value in the set process unit, e.g. in °C, m^3/h
				Hysteresis (abs.)	450004-00 450004-01 450004-02	The alarm condition is only canceled when the signal has changed into the normal operation range by the preset value.
				Switches	450005-00 450005-01 450005-02	Switches the selected output in a limit condition.
		Display groups				Group together inputs and calculated values. This allows important information to be retrieved in consolidated form during operation.
			Group 1 to 6			Various general settings for the groups for measured value display of the device.
				Identifier	460000-00 -01, -02, -03, -04, -05	Identifier for the groups
				Value 1	460001-00 -01, -02, -03, -04, -05	Choose which input/calculated variable is to be displayed in this group.
				Value 2	460003-00 -01, -02, -03, -04, -05	Choose which input/calculated variable is to be displayed in this group.
				Value 3	460005-00 -01, -02, -03, -04, -05	Choose which input/calculated variable is to be displayed in this group.
				Display		If you select a counter in "Value 1 to 3", in "Display", you can configure which data of the counter are to be displayed.

14.1.4 Diagnostics menu

Actual diagnos.				050000-00	Displays the current diagnostic message.
Last diagnostics				050005-00	Displays the last diagnostic message
Last restart				050010-00	Information as to when the device was last restarted (e.g. due to a power failure).
Diagnostic list					All pending diagnostic messages are listed.
Event logbook					Events such as a limit value violation and power failure are listed in the correct time sequence.
Device information					Displays important device information.
	Device tag name			000031-00	Individual device tag name (max. 17 characters).
	Serial number			000027-00	Please send these details with any questions about the unit.
	Order code			000029-00	Please send these details with any questions about the unit.
	Order identifier			000030-00	Please send these details with any questions about the unit.
	Firmware version			000026-00	Please send these details with any questions about the unit.
	ENP version			000032-00	Please send these details with any questions about the unit.
	ENP device name			000020-00	Please send these details with any questions about the unit.
	Device name			000021-00	Please send these details with any questions about the unit.
	Manufacturer ID			000022-00	Please send these details with any questions about the unit.
	Manufacturer name			000023-00	Please send these details with any questions about the unit.
	Firmware			009998-00	Please send these details with any questions about the unit.
	Hardware				Information on the hardware components.
		Device running time		010050-00	Indicates how long the device was in operation.
		Fault hours		010051-00	Indicates how long the device experienced a fault.
		Ethernet			Information about the Ethernet interface of the device. Only for devices with Ethernet interface.
			Firmware version	010026-00	Firmware version of Ethernet card. Please send these details with any questions about the unit.
			Serial number	010027-00	Serial number of Ethernet card. Please send these details with any questions about the unit.
	Device options				Hardware and software options of the device.
		Optional outputs		990000-00	
		Communication		990001-00	
		Protocol		990007-00	
		DP flow		990003-00	
		Tariff		990005-00	
		Callendar v. Dusen		990004-00	

Measured values			Displays the current measured values of the device. For displaying on the device.
	Hold	060000-00	Stops the entire measured value acquisition/storage. Select "No" to exit the hold function. The hold function is exited automatically after 5 minutes.
	Display	060010-00	Display of a measured value / calculated value. Grouping of 3 measured values for display in the PC operating software. The device always shows only one value.
	Status	060015-00	Status of the measured value.
	Value	060020-00	Current measured value/calculated value.
	Signal value	060035-00	Displays the physical measured value (mA, Ohm, etc)
Outputs			Current status of outputs (if used).
	Universal output	060120-00	Value currently output at the universal output.
	Relay 1/2	060100-00 060105-00	Current relay state
	Open Collector 1/2	060110-00 060115-00	Current state of the open collector output.
Simulation			Various functions/signals can be simulated for test purposes here. In Simulation mode normal recording of the measured values is interrupted and the intervention is logged in the event logbook.
	Universal output	050200	Choose the value which should be output. Select "Switched off" to exit the simulation. The simulation is exited automatically after 5 minutes. The simulation is NOT exited automatically when exiting the menu.
	Open Collector 1/2	050205-00 050210-00	Choose the value which should be output. Select "Switched off" to exit the simulation. The simulation is exited automatically after 5 minutes. The simulation is NOT exited automatically when exiting the menu.
	Relay 1/2	050215-00 050220-00	Manual activation of the selected relay. The simulation is exited automatically after 5 minutes. The simulation is NOT exited automatically when exiting the menu.

14.1.5 Expert menu

In the Expert menu, all parameters and settings of the device can be changed.

The menu contains all the parameters/settings from the **Setup** menu in addition to those described below.

Direct access				Direct access to parameters (rapid access).
Service code			010002-00	Service code for displaying the service parameters For PC operating software only.
System				Basic settings that are needed to operate the device (e.g. date, time, communication settings etc.).
	Language		010000-00	Select the operating language of the device.
	PRESET			Resets all the parameters to the factory settings. Can be changed via the service code only.
	Clear memory		059000-00	Delete internal memory.
	Reset		059100-00	Reset analysis to 0.
	Ethernet			Settings required to use the Ethernet interface
		MAC address	150000-00	MAC address of the device
		Port	150001-00	The system communicates with the PC software through this communication port. Default: **8000** If the network is protected by a firewall, this port may have to be enabled. In this case, contact your network administrator.
		Port	470001-00	The web server communicates through this communication port. Default: **80** If the network is protected by a firewall, this port may have to be enabled. In this case, contact your network administrator.
	Device options			Hardware and software options of the device.
		Activation code	000057-00	Enter a code to enable device options.
Inputs				Settings for the analog and digital inputs
	Damping		210010-00	Fast changes in the measured value or an irregular pulse input are attenuated at the input. Result: The measured values on the display, or values relayed via digital communication, change more slowly and measured value spikes are avoided. This damping has no effect on the counter. Decimal number, max. 5 digits incl. decimal separator. Factory setting: 0.0 s.
	Flow			
		Meas.val. corrct.		Determining the correction values to balance measurement tolerances. Procedure: ▪ Measure the current measured value at the lower measuring range. ▪ Measure the current measured value at the upper measuring range. ▪ Enter the lower and upper set point and actual values in each case.
			Range start	Lower correction value
			Target value	210051-00	Enter the set point at the lower range limit (e.g. measuring range 0 l/h up to 100 l/h: 0 l/h).

			Actual value	210052-00	Enter the value actually measured (e.g. measuring range 0 l/h up to 100 l/h: measured 0.1 l/h).
			Meas. range end		Upper correction value
			Target value	210054-00	Enter the set point at the upper range limit (e.g. measuring range 0 l/h up to 100 l/h: 100 l/h100 l/h).
			Actual value	210055-00	Enter the value actually measured (e.g. measuring range 0 l/h up to 100 l/h: measured 99.9 l/h).
			Damping	210010-00	Fast changes in the measured value or an irregular pulse input are attenuated at the input. Result: The measured values on the display, or values relayed via digital communication, change more slowly and measured value spikes are avoided. This damping has no effect on the counter. Decimal number, max. 5 digits incl. decimal separator. Factory setting: 0.0 s
		Fault mode			Settings that define how this channel behaves under fault conditions (e.g. open circuit, overrange).
			NAMUR NE 43	210060-00	Activate/deactivate monitoring of the 4 to 20 mA range as per NAMUR recommendation NE 43. The following error ranges apply when NAMUR NE43 is switched on: ▪ ≤ 3.8 mA: under range ▪ ≥ 20.5 mA: over range ▪ ≤ 3.6 mA or ≥ 21.0 mA: sensor error ▪ ≤ 2mA: cable open circuit
			In the event of an error	210061-00	Specify the value the device is to use in calculations if the measured value is invalid (e.g. open circuit).
			Error value	210062-00	Only if the setting "Error value" has been selected under "On error". The device continues calculating with this value in the event of an error. The calculated values are recorded in the deficit counter. The normal counter remains unchanged (does not run).
	Temperature				Settings for the temperature input.
		Damping		220008-00	Factory setting: 0.0 s. The more unwanted interference is superimposed over the measuring signal, the higher the value should be set. Result: Fast changes are dampened/suppressed. Decimal number, max. 5 digits incl. decimal separator.
		Meas.val. corrct.			Determining the correction values to balance measurement tolerances. Procedure: ▪ Measure the current measured value at the lower measuring range. ▪ Measure the current measured value at the upper measuring range. ▪ Enter the lower and upper set point and actual values in each case.
			Offset	220050-00	Factory setting "0". This offset is only effective on the analog input signal (no maths / bus channels). Only for RTD. Decimal number, max. 8 digits including decimal separator.
			Range start		Lower correction value Only for 0/4 to 20 mA.
			Target value	220052-00	Enter lower set point (e.g. measuring range 0 °C to 100 °C: 0 °C). Decimal number, max. 8 digits including decimal separator. Only for 0/4 to 20 mA.
			Actual value	220053-00	Enter the lower value actually measured (e.g. measuring range 0 °C up to 100 °C: measured 0.5 °C). Decimal number, max. 8 digits including decimal separator. Only for 0/4 to 20 mA.
			Meas. range end		Upper correction value Only for 0/4 to 20 mA.

			Target value	220055-00	Enter the upper set point (e.g. measuring range 0 °C up to 100 °C: 100 °C). Decimal number, max. 8 digits including decimal separator. Only for 0/4 to 20 mA.
			Actual value	220056-00	Enter the upper value actually measured (e.g. measuring range 0 °C up to 100 °C: measured 99.5 °C). Decimal number, max. 8 digits including decimal separator. Only for 0/4 to 20 mA.
		Fault mode			Settings that define how this channel behaves under fault conditions (e.g. open circuit, overrange).
			NAMUR NE 43	220060-00	Activate/deactivate monitoring of the 4 to 20 mA range as per NAMUR recommendation NE 43. The following error ranges apply when NAMUR NE43 is switched on: ▪ ≤ 3.8 mA: under range ▪ ≥ 20.5 mA: over range ▪ ≤ 3.6 mA or ≥ 21.0 mA: sensor error ▪ ≤ 2 mA: cable open circuit
			In the event of an error	220061-00	Specify the value the device is to use in calculations if the measured value is invalid (e.g. open circuit).
			Error value	220062-00	Only if the setting "Error value" has been selected under "On error". The device continues calculating with this value in the event of an error. The calculated values are recorded in the deficit counter. The normal counter remains unchanged (does not run).
	Pressure				
		Damping		220008-01	Factory setting: 0.0 s. The more unwanted interference is superimposed over the measuring signal, the higher the value should be set. Result: Fast changes are dampened/suppressed. Decimal number, max. 5 digits incl. decimal separator.
		Meas.val. corrct.			Determining the correction values to balance measurement tolerances. Procedure: ▪ Measure the current measured value at the lower measuring range. ▪ Measure the current measured value at the upper measuring range. ▪ Enter the lower and upper set point and actual values in each case.
			Range start		Lower correction value
			Target value	220052-01	Enter lower set point. Decimal number, max. 8 digits including decimal separator.
			Actual value	220053-01	Enter the lower value actually measured. Decimal number, max. 8 digits including decimal separator.
			Meas. range end		Upper correction value
			Target value	220055-01	Enter upper set point. Decimal number, max. 8 digits including decimal separator.
			Actual value	220056-01	Enter the upper value actually measured. Decimal number, max. 8 digits including decimal separator.
		Fault mode			Settings that define how this channel is to react under fault conditions (e.g. cable open circuit, over range).
			NAMUR NE 43	220060-01	Activate/deactivate monitoring as per NAMUR recommendation NE 43. The following error ranges apply when NAMUR NE43 is switched on: ▪ ≤ 3.8 mA: under range ▪ ≥ 20.5 mA: over range ▪ ≤ 3.6 mA or ≥ 21.0 mA: sensor error ▪ ≤ 2 mA: cable open circuit

			In the event of an error	220061-01	Specify the value the device is to use in calculations if the measured value is invalid (e.g. open circuit).
			Error value	220062-01	Only if the setting "Error value" has been selected under "On error". The device continues calculating with this value in the event of an error. The calculated values are recorded in the deficit counter. The normal counter remains unchanged (does not run).
Outputs					Settings only required if outputs (e.g. relays or analog outputs) are to be used.
	Universal output				Settings for the universal output (current or pulse output).
		Failure current		310009-00	Set the current that should be output in the event of an error (e.g. open circuit at input). Numerical value, max. 8 digits including decimal separator.
		Meas.val. corrct.			The output current value can be corrected here. This is only necessary if the downstream device cannot compensate for possible measurement section tolerances. Procedure: ▪ On the connected device, read out the displayed value in both the upper and lower measuring range. ▪ Enter the lower and upper set point and actual values in each case.
			Start value		Lower correction value
			Target value	310051-00	Enter lower set point.
			Actual value	310052-00	Enter the lower actual value that is displayed on the connected device.
			Full scale value		Upper correction value
			Target value	310054-00	Enter upper set point.
			Actual value	310055-00	Enter the upper actual value that is displayed on the connected device.
Diagnostic					Device information and service functions for swift device check. This information is also available in the **Diagnostics/Device information** menu.
	ENP device name			000020-00	Please specify these details if you have any questions about the device.
	Device name			000021-00	Please specify these details if you have any questions about the device.
	Serial number			000027-00	Please specify these details if you have any questions about the device.
	Order code			000029-00	Please specify these details if you have any questions about the device.
	Order identifier			000030-00	Please specify these details if you have any questions about the device.

14.2 Symbols

Symbol	Description
🔒	Device locked.
F	Fault For example, a channel that is not displayed in the current group is faulty.
M	Maintenance required For example, maintenance required in a channel not displayed in the current group.
⇄	External communication, e.g. Fieldbus

SIM	Simulation
⧗	Hold
▼	Low value
▲	High value
^	Counter overflow
Name of the inputs and process values	
C (DP)	C (DP flow)
DI 1	Digital input 1
DI 2	Digital input 2
ε	Epsilon (DP flow)
Flow	Volume flow
h	Enthalpy
M	Mass flow
Δp	Differential pressure
P	Power
Q pv	Pulse value Q
ρ	Density
Σ1, Σ1 (i), Σ1 (d), Σ1 (m), Σ1 (y), Σ1 (1)	Tariff 1: total, interval, day, month, year, billing date
Σ2, Σ2 (i), Σ2 (d), Σ2 (m), Σ2 (y), Σ2 (1)	Tariff 2: total, interval, day, month, year, billing date
ΣE, ΣE (i), ΣE (d), ΣE (m), ΣE (y), ΣE (1)	Energy counter: total, interval, day, month, year, billing date
ΣM, ΣM (i), ΣM (d), ΣM (m), ΣM (y), ΣM (1)	Mass counter: total, interval, day, month, year, billing date
ΣV, ΣV (i), ΣV (d), ΣV (m), ΣV (y), ΣV (1)	Volume counter: total, interval, day, month, year, billing date
Σx, Σx (i), Σx (d), Σx (m), Σx (y), Σx (1)	Deficit counter: total, interval, day, month, year, billing date
Temp.	Temperature

14.3 Definition of important system units

Volume	
bl Device display "bbl"	1 barrel (general liquids), corresponds to 119.24047 l

gal	1 US gallon, corresponds to 3.7854 l
Igal	Imperial gallon, corresponds to 4.5609 l
l	1 liter = 1 dm^3
hl	1 hectoliter = 100 l
m^3	Corresponds to 1 000 l
ft^3	Corresponds to 28.37 l
Temperature	
	Conversion: ▪ 0 °C = 273.15 K ▪ ° C = (°F - 32)/1.8
Pressure	
	Conversion: 1 bar = 100 kPa = 100 000 Pa = 0.001 mbar = 14.504 psi
Mass	
ton (US)	1 US ton, corresponds to 2 000 lbs (= 907.2 kg)
ton (long)	1 long ton, corresponds to 2 240 lbs (= 1 016 kg)
Power (heat flow)	
ton	1 ton (refrigeration) corresponds to 200 Btu/min
Btu/s	1 Btu/s corresponds to 1.055 kW
Energy (heat quantity)	
therm	1 therm, corresponds to 100 000 Btu
tonh	1 tonh, corresponds to 1 200 Btu
Btu	1 Btu corresponds to 1.055 kJ
kWh	1 kWh corresponds to 3 600 kJ corresponds to 3 412.14 Btu

Index

A
Adjusting the current inputs 44
Applications
  Steam mass and energy 27
  Tariff counter for steam mass and energy flow (option) 31

C
Callendar van Dusen 46
Code 38
Communication 21, 39
  Ethernet TCP/IP 21
  M-Bus 22
  Modbus RTU 21
  Modbus TCP 21
Complete locking 38
Connecting the sensors 17
  Flow 17
  Pressure 20
  Temperature 19
Current inputs
  Adjustment 44

D
Data logging 36
DIN rail mounting 12
Display 25
Display mode 36
Display settings 35
Display symbols 86
Document
  Function 3
Document function 3
DP flow calculation 46

E
Electrical connection
  Post-connection check 22
Ethernet 42
Event logbook 38

F
Fault mode 45
Fieldbus systems 39
FieldCare Device Setup 25
Fine-tuning of the device 44

H
Hardware locking 25
Hold function 36

I
Inputs 32
  Digital inputs 33
  Flow current signal 32
  Flow pulse transmitter 32
  Temperature inputs 33
Installation
  Panel mounting 11
  Pipe mounting 12
  Support rail/DIN rail 12
  Wall mounting 10

K
K-factor 32

L
Lead sealing
  Device 38
Limit values 34
Logbooks 38

M
M-Bus 39
Menu
  Diagnostic 81
  Display/operat. 70
  Expert 44, 83
  Language 70
  Setup 71
Modbus RTU/(TCP/IP) 40

N
No. of Sums/counter overflow 36

O
Open collector outputs 33
Operating elements 24
Operating keys 24
Operating software 25
Operational safety 6
Outputs 20, 33
  Analog output 20
  Open Collector 33
  Open collector output 20
  Pulse output 20
  Relay 20, 33
  Universal output 33

P
Panel mounting 11
Parameter
  Access protection 38
  Communication/fieldbus systems 39
  Display settings and units 35
  Inputs 32
  Outputs 33
Pipe mounting 12
Product safety 6
Pulse value 32

R
Relay 33
  Counter operating mode 35

SP lower operating mode 34
SP upper operating mode 34
Requirements for personnel 6
Return 55

S

Sensors
Connection 17
Flow 17
Pressure 20
Temperature 19
Spare parts 55
Storage capacity 37
Symbols 86

T

Tariff counter 45
Temperature calibration (CVD) 46
Troubleshooting
Alarm relay 49
Error messages 50
Hold function 49
M-Bus 49
Modbus 49

U

Units 36
Universal output (current and active pulse output) . . . 33

W

Wall mounting 10
Web server 43
Web server settings 44
Wiring
Connecting the sensors 17
Open the housing 17
Workplace safety 6
Write protection switch 25

71744307

www.addresses.endress.com

Endress+Hauser

People for Process Automation